SUPPLEMENTAL ENVIRONMENTAL ASSESSMENT

FOR

JUBAN ROAD WIDENING

I-12 TO US 190 (FLORIDA BLVD)
ROUTE LA 1026
LIVINGSTON PARISH
STATE PROJECT NOs. H.004634 & H.000464
FEDERAL AID PROJECT NOs. H004634 & H000464

JULY 2015

U.S. DEPARTMENT OF TRANSPORTATION
FEDERAL HIGHWAY ADMINISTRATION

AND

LOUISIANA DEPARTMENT OF TRANSPORTATION AND DEVELOPMENT

THIS PAGE INTENTIONALLY LEFT BLANK

LIST OF ACRONYMS **iv**

ENVIRONMENTAL CHECKLIST **v**

SUMMARY OF PERMITS, MITIGATION, AND COMMITMENTS **ix**

EXECUTIVE SUMMARY **xi**

1. **Introduction** **1**
   - 1.1 What is an Environmental Assessment? 1
   - 1.2 Where is the Proposed Project in the Development Process? 2
2. **Project Purpose and Need** **2**
   - 2.1 What is the Purpose of the Project? 2
   - 2.2 Why is the Project Needed? 4
     - 2.2.1 Capacity 4
     - 2.2.2 System Linkage 4
     - 2.2.3 Social Demands or Economic Development 5
3. **Proposed Alternatives** **5**
   - 3.1 Which Build Alternatives Were Initially Proposed? 5
   - 3.2 Preferred Build Alternative 7
     - 3.2.1 The Preferred Build Alternative 7
     - 3.2.2 Complete Streets Policy 8
     - 3.2.3 Access Management Policy 8
   - 3.3 No-Build Alternative 9
4. **Environmental Resources, Impacts, and Mitigation** **9**
   - 4.1 Environmental Conditions and Potential Effects 9
     - 4.1.1 Land Use and Community Character 9
     - 4.1.2 Economic Activities 10
     - 4.1.3 Relocations of Residences and Businesses 11
     - 4.1.4 Environmental Justice and Demographics 11
     - 4.1.5 Cultural Resources 13
     - 4.1.6 Section 4(f) Resources 14
     - 4.1.7 Section 6(f) Resources 14
     - 4.1.8 Community Facilities, Services, and Social Resources 14
     - 4.1.9 Wildlife and Protected Species 15
     - 4.1.10 Wetland Reserve Program 15
     - 4.1.11 Wetlands and Other Waters 15
     - 4.1.12 Floodplains 16
     - 4.1.13 Coastal Resources and Essential Fish Habitat 16
     - 4.1.14 Subsurface Water 16
     - 4.1.15 Wild, Scenic, and Natural Rivers 17
     - 4.1.16 Navigable Waterways 17
     - 4.1.17 Farmland 17

4.1.18 Noise 17
4.1.19 Air Quality 18
4.1.20 Potential Hazardous Waste Sites 20
4.1.21 Travel Patterns 21
4.2 Constructability 21
4.3 Indirect Effects 22
4.4 Cumulative Impacts 22
4.5 Mitigation of Adverse Impacts 23
4.5.1 Acquisition of Right-of-Way and Relocations 23
4.5.2 Wetlands and Other Waters 24
4.5.3 Floodplains 24
4.5.4 Noise 24
4.5.5 Potential Waste Sites 24
4.5.6 Traffic Disruptions 24
4.5.7 Construction Impacts 25
5. Public Comments and Agency Coordination 25
5.1 How Was the Public Involved in the Environmental Assessment Process? 25
5.2 Open House Public Meeting 25
6. Comparison of the Build and No-Build Alternative 28

TABLES

Table 4.1	**Race and Ethnicity by Census Block**	**12**
Table 4.2	**Household Income and Poverty Levels by Census Tract**	**13**
Table 4.3	**Number of Impacted Receivers**	**18**
Table 4.4	**Peak Traffic Volumes for Perkins Road and Juban Road Modeled Carbon Monoxide Concentrations for Perkins Road**	**20**
Table 5.1	**Public Meeting Comments and Responses**	**26**
Table 6.1	**Comparison of Impacts by Alternative**	**28**
Table 6.2	**Estimated Costs of Preferred Build Alternative**	**29**

FIGURE

1	**Project Location**	**3**
2	**Juban Road Noise Receivers**	**19**

APPENDICES

A **Exhibits**

B **Typical Cross Sections**

C **Traffic Volume Data**

D **Anticipated Relocations**

E **Proposed Driveway Removals**

F **Solicitation of Views Correspondence**

G **Section 106 Correspondence**

LIST OF ACRONYMS

ACOE	U.S. Army Corps of Engineers
ACS	American Community Survey
ADT	Average Daily Traffic
APE	Area of Potential Effect
BFE	Base Flood Elevation
CHILP	Citizens for Highways and Infrastructure in Livingston Parish
CRS	Cultural Resources Survey
CSRP	Conceptual Stage Relocation Plan
CSS	Context Sensitive Solutions
dBA	A-weighted Decibels
DOT	U.S. Department of Transportation
EA	Environmental Assessment
EIS	Environmental Impact Statement
EPA	Environmental Protection Agency
ESA	Environmental Site Assessment
FHWA	Federal Highway Administration
FONSI	Finding of No Significant Impact
HREC	Historical Recognized Environmental Condition
I-12	Interstate 12
LDEQ	Louisiana Department of Environmental Quality
LDOTD	Louisiana Department of Transportation and Development
LDWF	Louisiana Department of Wildlife and Fisheries
LNHP	LDWF Natural Heritage Program
LOS	Level of Service
LWCF	Land and Water Conservation Fund
MPO	Metropolitan Planning Organization
MUTCD	Manual on Uniform Traffic Control Devices
NAC	Noise Abatement Criteria
NEPA	National Environmental Policy Act
NRCS	Natural Resources Conservation Service
NRHP	National Register of Historic Places
RCB	Reinforced Concrete Box culvert
RCUT	Restricted Crossing U-Turn
REC	Recognized Environmental Condition
ROW	Right-of-Way
UA	Urban Arterial
USC	United States Code
USFWS	U.S. Fish and Wildlife Service
UST	Underground Storage Tank

ENVIRONMENTAL CHECKLIST

STATE PROJECT NOs. H.004634 & H.000464
FEDERAL AID NOs. H004634 & H000464
LA 1026: JUBAN ROAD WIDENING
I-12 TO US 190 (FLORIDA BLVD)
LIVINGSTON PARISH

1. General Information

☐Conceptual Layout ☐Line and Grade ☒Preliminary Plans
☐Survey ☐Plan-in-Hand ☐Advance Check Prints

2. Class of Action

☐ Environmental Impact Statement (E.I.S.) ☐ State Funded Only (EE/EF/ER)
☒ Environmental Assessment (E.A.)
☐ Categorical Exclusion (C.E.)
☐ Programmatic C.E. (as defined in FHWA letter of agreement dated 03/15/95)

3. Project Description

The Louisiana Department of Transportation and Development (LDOTD) proposes to make improvements to Juban Road (LA 1026) from I-12 (CSLM 0.000; 32.002433, -91.256236 DD) to US 190 (CSLM 5.840; 32.074319, -91.234642 DD) in Livingston Parish. The proposed construction would include widening along the existing center line of the roadway with additional right-of-way required on both sides. In addition, the project includes the construction of three roundabouts and frontage roads. Some residential and business relocations would occur. The widening of Juban Road from two lanes to four lanes, the addition of shared-use bicycle/pedestrian paths, and traffic access management measures comprise the proposed project. The total length of construction is approximately 1.2 miles.

4. Public Involvement

☒ Views were solicited on January 17, 2013.
☐ Views were not solicited.
☒ Public Involvement events held. (List events and dates in Section 11.)[1]
☐ A public hearing/opportunity for requesting a public hearing required. (List dates in Section 11.)
☐ A public hearing/opportunity for requesting a public hearing not required.

5. Real Estate

	NO	YES	N/A
a. Will additional **right-of-way** be required?	☐	☒[2]	☐
Is right of way required from a **burial/cemetery** site?	☒	☐	☐
Is right-of-way required from a Wetland Reserve Program (**WRP**) property?	☒	☐	☐
Is required right-of-way prime **farmland**? (Use form AD 1006, if needed) ...	☒	☐	☐
b. Will any **relocation** of residences or businesses occur?	☐	☒[3]	☐
c. Are construction or drainage **servitudes** required?	☐	☒[4]	☐

6. Section 4(f) and Section 6(f)

	NO	YES	N/A
a. Will historic sites or publicly owned parks, recreation areas, wildlife or waterfowl refuges (**Section 4f**) be affected?	☒	☐	☐
b. Are properties acquired or improved with **L&WC** funds affected?	☒	☐	☐

7. Cultural Section 106

	NO	YES	N/A
a. Are any **known historic properties** adjacent or impacted by the project? (If so, list below)……	☒	☐	☐
b. Are any **known archaeological sites** adjacent or impacted by the project? (If so, list site # below) ……	☐	☒[5]	☐
c. Would the project affect property owned by or held in trust for a federally recognized **tribal government**? ……	☒	☐	☐

8. Natural & Physical Environment

	NO	YES	N/A
a. Are **wetlands** affected? ……	☐	☒[6]	☐
b. Are **other waters** of the U.S. affected? ……	☐	☒[6]	☐
c. Are **Endangered/Threatened Species/Habitat** affected? ……	☒	☐	☐
d. Is project within 100 Year **Floodplain**? ……	☐	☒	☐
e. Is project in **Coastal Zone** Management Area? ……	☒	☐	☐
f. Is project in a **Coastal Barrier Resources** area? ……	☒	☐	☐
g. Is project on a **Sole Source Aquifer**? ……	☐	☒[7]	☐
h. Is project impacting a **navigable waterway**? ……	☒	☐	☐
i. Are any State or Federal **Scenic Rivers/Streams** impacted? ……	☒	☐	☐
j. Is a **noise** analysis warranted (Type I project) ……	☐	☒	☐
k. Is an **air** quality study warranted? ……	☐	☒	☐
l. Is project in a **non-attainment** area? ……	☐	☒	☐
m. Is project in an approved Transportation Plan, Transportation Improvement Program (TIP) and State Transportation Improvement Program (STIP)?....	☐	☒	☐
n. Are **construction** air, noise, & water impacts major? ……	☒	☐	☐
o. Will the project affect or be affected by a **hazardous waste site**, leaking underground storage tank, oil/gas well, or other potentially contaminated site?....	☒	☐	☐

9. Social Impacts

	NO	YES	N/A
a. Will project change **land use** in the area? ……	☐	☒	☐
b. Are any **churches and schools** impacted by or adjacent to the project? (If so, list below)……	☐	☐	☐
c. Has **Title VI** been considered? ……	☐	☒	☐
d. Will any **specific groups** be adversely affected? (i.e., *minorities, low-income, elderly, disabled,* etc.) ……	☒	☐	☐
e. Are any **hospitals, medical facilities, fire police** facilities impacted by or adjacent to the project? (If so, list below)……	☒	☐	☐
f. Will **Transportation patterns** change? ……	☐	☒[8]	☐
g. Is **Community cohesion** affected by the project? ……	☒	☐	☐
h. Are **short-term social/economic** impacts due to construction considered major?	☒	☐	☐
i. Do conditions warrant **special construction times?** (i.e., *school in session, congestion, tourist season, harvest*) ……	☒	☐	☐
j. Were **Context Sensitive Solutions** considered? (If so explain below)……	☐	☒[9]	☐
k. Were **bike and pedestrian** accommodations considered? (explain below)……	☐	☒[10]	☐
l. Will the **roadway/bridge be closed?** (If yes, answer questions below)……	☒	☐	☐
Will a **detour bridge** be provided? ……	☐	☐	☐
Will a **detour road** be provided? ……	☐	☐	☐
Will a **detour route** be signed? ……	☐	☐	☐

10. Permits (Check all permits that may be required)

☐Corps Nationwide	☐CUP/Consistency Determination	☐LA Scenic Stream
☒Corps Section 404/10	☐USCG Bridge	☐DEQ WQC
☐Levee	☐USCG Navigational Lights	☒LPDES Stormwater
☐Other (explain below)		

11. Other (Use this space to explain or expand answers to questions above.)

[1]**Section 4 –** A Public Meeting was held on April 30, 2013; comments received have been summarized and addressed. **SEE Table 5.2**

[2]**Section 5(a) –** A total of approximately 13.976 acres of additional right-of-way will be required.

[3]**Section 5(b) –** The relocation of 25 residences and 5 businesses is anticipated. **SEE APPENDIX D**

[4]**Section 5(c) –** A total of approximately 0.385 acre of construction servitude will be required.

[5]**Section 7(b) –** The proposed project area is located adjacent to an archaeological site of undetermined eligibility found during the Phase I CRS. LDOTD's finding of no historic properties affected has been sent to the SHPO for concurrence. **SEE APPENDIX G**

[6]**Section 8(a,b) –** Approximately 8.665 acres of jurisdictional wetlands and 0.113 acre of Other Waters of the U.S. would be impacted. **SEE SEPARATE WETLAND FINDING REPORT**

[7]**Section 8(g) –** The proposed project area is located on the Southern Hills Aquifer in a low recharge potential area; however, the proposed construction activities will not have an adverse effect on the quality of the ground water underlying the project site.

[8]**Section 9(f) –** LDOTD has adopted an Access Management Policy for the construction of new roadways. The policy would be implemented through the use of a raised median and right-in/right-out only turns (i.e. no left-out turns) from connecting streets, business driveways, and personal driveways onto Juban Road. Three roundabouts would be constructed along the route. Other turning movements would be routed through one of the roundabouts.

[9]**Section 9(j) –** The preferred Build Alternative was developed to avoid all structures to the greatest extent possible and to reduce the amount of ROW by adjusting design features. At the same time, the project corridor will be enhanced by the addition of a shared-use path. The alignment of the preferred Build Alternative locates the new median and lanes where they would cause the fewest overall impacts. **SEE Section 4.5**

[10]**Section 9(k) –** LDOTD's Complete Streets Policy is proposed to be implemented through the construction of shared-use bicycle/pedestrian paths. Maintenance and liability for bicycle paths outside the limits of the curb or shoulder would be the responsibility of the local jurisdiction.

Preparer: Cyndi Bowman
Title: Environmental Impact Specialist
LDOTD Environmental Section
Date: July 16, 2015

Attachments

☒	S.O.V. and Responses	☒	Exhibits and/or Maps
☒	Wetlands Finding	☐	4(f) Evaluation
☐	Project Description Sheet	☐	Form AD 1006 (Farmlands)
☒	Conceptual Stage Relocation Plan	☒	106 Documentation
☒	Noise Analysis	☐	Other: _____
☐	Air Analysis		

THIS PAGE INTENTIONALLY LEFT BLANK

SUMMARY OF PERMITS, MITIGATION, AND COMMITMENTS

Mitigation

The Louisiana Department of Transportation and Development (LDOTD) will implement the following measures to mitigate the environmental effects associated with the proposed project:

- The proposed project will impact a total of **approximately 8.665 acres of jurisdictional wetlands** and **approximately 0.113 acre of jurisdictional Other Waters of the U.S.** The U.S. Army Corps of Engineers (ACOE) will make the determination as to the nature and extent of any potential impact. A permit from the ACOE will be required should the project-related impact areas be deemed jurisdictional. Through the issuance of any ACOE permit, the proposed project may be subject to additional measures identified by the ACOE.

- In addition to abiding by all applicable federal, state, and local laws, ordinances and regulations, the construction contractor will adhere to applicable measures detailed in *Louisiana Standard Specifications for Roads and Bridges*, 2006 ed., particularly Section 107, "Legal Relations and Responsibility to Public," and Section 204, "Temporary Erosion Control", both of which include construction techniques to be implemented regarding potential impacts to wetlands/Other Waters of the U.S.; air, water, and noise pollution; archaeological encounters; and erosion control.

Permits

It is anticipated that the following permits will be required prior to commencement of construction activities:

ACOE Nationwide Permit
LDEQ Water Quality Certificate
LPDES Storm Water Permit

Commitments

Per their request, a copy of the SHPO comments regarding this project and the official finding regarding historic properties within the Area of Potential Effect (APE) for this project will be forwarded to the Choctaw Nation of Oklahoma and the Jena Band of Choctaw Indians upon receipt. In the event of inadvertent discovery of cultural materials such as human remains, pottery, and/or other archaeological or culturally significant artifacts are encountered during construction, activity in proximity to the location must cease and appropriate authorities, including the Choctaw Nation of Oklahoma, the Alabama-Coushatta Tribe of Texas, and the Jena Band of Choctaw Indians shall be notified.

The proposed project is located within the 100-year flood zone in Zones A and AE, which are high-risk flood hazard areas. During construction, especially during excavation, the contractor must allow for the adequate flow of water, and ensure that there will be no back up of water and no instance of the creation of flooding where there was no flooding prior to construction. Construction practices will be implemented to maintain the surrounding area clear of debris and other obstacles that would cause the accumulation and/or prevent the flow of water in floodplain areas.

To mitigate potential water quality impacts to surface waters, the proposed project will adhere to standard LDOTD best management practices and applicable LDEQ permit provisions to prevent erosion and nonpoint source pollution that may result from construction-related activities.

The LDOTD Floodplain Management Coordinator stated that during and after construction, consideration must be given for the occurrence of a base flood inundation. Also, consideration must be given to the responsibility for cleaning debris and keeping the surrounding area clear so as not to interfere with its function.

LDOTD's Complete Streets Policy is proposed to be implemented through the construction of a shared-use bicycle/pedestrian path. Maintenance and liability for sidewalks and bicycle paths outside the limits of the curb or shoulder would be the responsibility of the local jurisdiction. An agreement between LDOTD and Livingston Parish would be required for the construction and maintenance of the shared-use bicycle/pedestrian path.

Short-term construction impacts (e.g., noise, air quality) will be mitigated through adherence to applicable local, state, and federal regulations, including (but not limited to) Section 107.14 (Environmental Protection) of the *Louisiana Standard Specifications for Roads and Bridges*, as well as appropriate LDEQ Air Quality Regulations governing fugitive emissions of particulate matter during road construction activities (LAC 33:III.1305).

EXECUTIVE SUMMARY

This Supplemental Environmental Assessment (EA) document summarizes the anticipated impacts resulting from the proposed Juban Road (LA 1026) Widening from I-12 to US 190 in Livingston Parish, Louisiana. The proposed project was originally part of an EA for the Juban Road Interchange at I-12, which was environmentally approved in September 2002 under Federal Aid Project No. IR-121.107. In the original EA, the Federal Highway Administration (FHWA) approved the logical termini for the proposed project as the interchanges of LA 3002 and I-12 to the west; LA 447 and I-12 to the east; LA 1026 and US 190 to the north; and LA 1026 and LA 16 to the south. The limits of construction extend from I-12 to US 190 (Florida Blvd), for a construction length of approximately 1.2 miles.

The existing roadway is primarily a two lane roadway with 12-foot wide travel lanes. This section of Juban Road is considered an Urban Minor Arterial roadway and serves as an important commuter link for Livingston Parish residents. The Level of Service (LOS) on Juban Road between I-12 and US 190 is currently classified as LOS F.

In the original EA, the proposed widening of Juban Road from I-12 to US 190 consisted of the construction of four travel lanes; a continuous center turn lane; and curb and gutter drainage. Because it is the policy of LDOTD that all multi-lane roadways, independent of their roadway classification, will be designed with a median, the roadway configuration of four lanes with a continuous center median was discarded. The newly proposed project calls for the replacement of the existing roadway with a new roadway that meets current design criteria, which includes the Department's Access Management Policy and Complete Streets Policy.

One preferred Build Alternative is being proposed to move forward for further consideration. Juban Road would be widened to four 12-foot wide travel lanes with a 5-foot wide raised median. Ten-foot bicycle/pedestrian shared-use paths are included on both sides of roadway. Three roundabouts would be constructed: one located just north of I-12; one located mid-way along the project corridor approximately 1,600 feet south of the intersection of US 190, and one located at the intersection of Juban Road and US 190. The proposed new roadway would have an approximate 180-foot clear roadway. In addition, new frontage roads would be constructed parallel to Juban Road east and west of the second roundabout. The new frontage roads would be constructed by LDOTD as part of the Juban Road Widening Project and would then be turned over to Livingston Parish for operation and maintenance. Curb and gutter with subsurface drainage would be installed along Juban Road and US 190.

The proposed project would be constructed in two phases. Phase I of the proposed project H.000464 consists of the construction of the roundabout at the intersection of US 190 and Juban Road; US 190 would be widened from two lanes to four lanes as it approaches the new roundabout. Phase II of the proposed project H.004634 consists of the widening of Juban Road from I-12 to US 190, the construction of two roundabouts, and the construction of new frontage roads.

The preferred Build Alternative was evaluated for its impacts upon the environment. The Wetland Report indicates that approximately 8.665 acres of jurisdictional wetlands and 0.113 acre of Other Waters of the U.S. would be impacted. The Traffic Noise Study indicated that the future Build scenario will result in 32 impacted receivers; however, noise barriers were not considered feasible.

A total of approximately 13.976 acres of additional right-of-way (ROW) and 0.385 acre of construction servitude would be required for the proposed project. The relocation of 25 residences and 5 businesses is anticipated. No previously recorded archaeological sites, historic structures, historic districts, or standing structures were identified within or adjacent to the project area.

No disproportionately high or adverse impacts to minority and/or low-income populations would occur. No threatened or endangered species would be impacted. No violations of the CO thresholds for air quality would be expected with the proposed project. During the Phase I Site Assessment, two sites containing current underground storage tanks (USTs) were found; however, both sites are currently in compliance and are not considered recognized environmental conditions (RECs).

The project corridor does not contain any known wetland reserve properties or scenic streams within the project limits. The proposed project would not have an adverse effect on the quality of ground water underlying the site. There are not anticipated to be any negative impacts to the flood plain as a result of the proposed preferred Build Alternative. Encroachments upon the floodplain would not increase the base flood elevation (BFE) to a level that would violate applicable floodplain regulations. No prime farmland or agricultural use would be impacted by the proposed project.

The estimated project cost for the preferred Build Alternative is approximately $22,000,000. The proposed project is being funded with state bond money and federal safety dollars. Federal safety dollars would be used for the roundabout to be located at the US 190 / Juban Road intersection, while state bond money would be used for the remainder of the proposed project. Additionally, Livingston Parish is seeking to secure additional capital outlay funds to allow a sewer system to be constructed.

As required under the National Environmental Policy Act (NEPA), the No-Build Alternative was also evaluated. Under the No-Build Alternative, the widening of Juban Road through the project area would not occur. The roadway would remain as is with open ditches and two 12-foot wide travel lanes. Future capacity concerns would not be addressed. Juban Road would remain without shared-use paths. No residential or business relocations would be required and no potential impacts to wetlands or other waters would occur. No utility relocations would be required. The short-term adverse impacts associated with the proposed project would be avoided. The No-Build Alternative is anticipated to result in continued degradation of the level of service, which is currently at LOS F.

1. Introduction

LDOTD and FHWA are proposing to widen Juban Road from I-12 to US 190 (Florida Blvd) in Livingston Parish, Louisiana. The widening would be along the existing center line of the roadway with additional right-of-way required on both sides. In addition, the project includes the construction of three roundabouts and frontage roads. An estimated 25 residential and 5 business relocations would occur. The widening of Juban Road from two lanes to four lanes, the addition of shared-use bicycle/pedestrian paths, and traffic access management measures comprise the proposed project. A detailed description of the existing and proposed roadway can be found in Section 3.2.1. The total length of construction is approximately 1.2 miles and the project location is identified in Figure 1.

The proposed project was originally part of an EA for the Juban Road Interchange at I-12, which was environmentally approved in September 2002 under Federal Aid Project No. IR-121.107. At that time, the proposed widening of Juban Road from I-12 to US 190 consisted of the construction of four travel lanes; a continuous center turn lane; and curb and gutter drainage. The newly proposed project calls for the replacement of the existing roadway with a new roadway that meets current design criteria, which includes the Department's Access Management Policy and Complete Streets Policy.

LDOTD's Complete Streets Policy is proposed to be implemented through the construction of shared-use bicycle/pedestrian paths on both sides of the new roadway. Maintenance and liability for bicycle paths outside the limits of the curb or shoulder would be the responsibility of the local jurisdiction. An agreement between LDOTD and Livingston Parish will be required for the construction and maintenance of the shared-use bicycle/pedestrian paths.

LDOTD has adopted an Access Management Policy for the construction of new roadways. Access Management is the control of access connections on a roadway to mitigate impacts to safety performance. Access connections can include driveways, streets, and other means of connecting to a roadway. The policy would be implemented through the use of a raised median and right-in/right-out only turns (i.e. no left-out turns) from connecting streets, business driveways, and personal driveways onto Juban Road. Three roundabouts would be constructed along the route. Other turning movements would be routed through one of the roundabouts. Drivers wishing to turn left onto Juban Road would be required to first turn right, then travel to the next roundabout. Some redundant driveways along the entire project length of Juban Road would be closed (Appendix E) in order to implement the Access Management Policy. New frontage roads, which would be constructed parallel to Juban Road east and west of the second roundabout, are proposed. The frontage roads would enhance access to existing properties and provide opportunities to support future development. Some affected properties would use the new frontage roads to access Juban Road through the new roundabout.

This document is a Supplemental Environmental Assessment (EA) prepared to evaluate the effects the proposed project would have on the natural and human environment.

1.1 What is an Environmental Assessment?

The National Environmental Policy Act (NEPA) directs federal agencies to conduct environmental reviews to consider the potential impacts from proposed federal undertakings. The NEPA process requires coordination with local, state, and federal agencies throughout planning and project development decision-making. When considering approval of proposed transportation projects, FHWA and LDOTD are committed to the examination and minimization of potential impacts to the human and natural environment. NEPA requires the consideration of project alternatives that would satisfy the project's stated purpose while balancing the potential effects the project may have on the human and natural environment. To ensure transparency, the NEPA process must be clearly documented. Potentially affected

communities and other stakeholders are provided the opportunity to ask questions and provide comments about proposals, alternatives, and potential environmental impacts. Public input, responses to public concerns, and choices made about the project are fully documented in this Supplemental EA.

When the significance of impacts from a proposed transportation project is uncertain, an EA is prepared. Unlike an Environmental Impact Statement (EIS) that is prepared when significant impacts are known, an EA is a concise public document that presents sufficient evidence and analysis for determining whether the impacts from the proposed action warrant further analysis in an EIS, or whether a Finding Of No Significant Impact (FONSI) is appropriate.

1.2 Where is the Proposed Project in the Development Process?

In the original EA, which was environmentally approved in September 2002 under Federal Aid Project No. IR-121.107, FHWA approved the logical termini (the end points of the project study area) as the interchanges of LA 3002 and I-12 to the west; LA 447 and I-12 to the east; LA 1026 and US 190 to the north; and LA 1026 and LA 16 to the south. The limits of construction (the segment of roadway where widening is proposed) along Juban Road extend from I-12 to US 190 (Florida Blvd). The limits of construction along US 190 extend approximately 0.3 miles east and west of the Juban Road/US 190 intersection. The total length of construction is approximately 1.2 miles.

Prior to commencement of this Supplemental EA, LDOTD provided preliminary project information to federal, state, and local agencies; elected officials; local stakeholders; and other interested parties requesting their views regarding the project. An Open House Public Meeting was held on April 30, 2013 to inform interested parties on the relevant project components, the proposed alternatives, and the environmental clearance process. Transcripts of the Open House Public Meeting were distributed to state and local officials, and state and local public libraries. Upon approval by FHWA, the Supplemental EA will be distributed to state and federal regulatory agencies, affected communities, libraries in the project area, and other interested parties to solicit public comment on the proposed project. A Public Hearing will be scheduled once the Supplemental EA is approved by FHWA for public distribution.

2. Project Purpose and Need

The focus of this Supplemental EA is the portion of Juban Road (LA 1026) located north of I-12 to US 190 (Florida Blvd) in Livingston Parish, Louisiana, in the city of Denham Springs. This roadway is an important commuter link for residents of Livingston Parish traveling to Baton Rouge, New Orleans, and numerous industrial plants along the Mississippi River.

The purpose and need for the project has been documented and a reasonable, feasible alternative has been developed to address the purpose and need. This Supplemental EA document will evaluate the effects of the preferred Build Alternative on the natural and human environment.

2.1 What is the Purpose of the Project?

The purpose of the proposed project is to upgrade the capacity of Juban Road to relieve traffic congestion and improve access to I-12, and to modify the Juban Road intersection with US 190 (Florida Blvd) as required to improve traffic operations.

Figure 1

Juban Road at US 190
End of Project
Juban Road near I-12
Beginning of Project
WEST COLYELL CREEK
GRAYS CREEK
UNNAMED STREAM
190
12
1
0.5
0
1
Miles
PROJECT LOCATION MAP
SOURCE: USGS 1:25,000 TOPOGRAPHIC MAP - PONCHATOULA QUADRANGLE
STATE PROJECT NO. H.004634
FEDERAL AID PROJECT NO. H004634
JUBAN ROAD WIDENING (I-12 TO US 190)
LA 1026
LIVINGSTON PARISH
DOTD
LOUISIANA DEPARTMENT OF
TRANSPORTATION & DEVELOPMENT
Livingston

2.2 Why is the Project Needed?

Denham Springs, Walker, and other Livingston Parish communities located east of the city of Baton Rouge have experienced, and continue to experience, substantial commercial and residential growth with accompanying traffic congestion. This portion of Juban Road is one of the main connector roads to I-12 in Livingston Parish, and over the past several years has seen a substantial increase in traffic congestion in the morning and afternoon peak traffic volumes and in the amount of daily traffic volumes.

Based on the LDOTD highway functional systems, Juban Road is classified as an Urban Minor Arterial roadway. It has varying right-of-way widths, overhead and underground utilities, telephone cable crossings, and gas pipeline utilities within the rights-of-way. Currently, from I-12 to US 190, the existing roadway consists of two 12-foot wide travel lanes with 5-foot wide aggregate shoulders, open ditches, and no median.

2.2.1 Capacity

Traffic volume data (Appendix C) was prepared in August 2012; the build year was determined to be 2014 and the design year was selected as 2034. Traffic counts measured existing average daily traffic (ADT), and a 3.0% annual growth rate was used to project future ADT. Year 2014 and 2034 ADT were calculated at 6,400 and 11,600 respectively.

Within the project limits, there is currently one signalized intersection located at US 190, which operates as fully-actuated. Vehicle classification counts for the project corridor reveal that heavy vehicles make up approximately 5.3% of the ADT. The posted speed limit on this portion of Juban Road is 45 miles per hour.

Level of Service (LOS) is a qualitative measure describing operational conditions within a traffic stream. This measure is based on factors such as speed and travel time, freedom to maneuver, traffic interruptions, comfort, and convenience. Depending on these operational conditions, the roadway is assigned a grade of A through F. An “A” represents free flow traffic and an “F” represents operational failure, with ease of traffic movement becoming increasingly difficult as the volume of traffic increases. According to the LDOTD Highway Needs File, the current level of service for this segment of Juban Road is LOS F. The future level of service for Juban Road was calculated using the traffic projections prepared by LDOTD for the design year 2034. The proposed roadway improvements would increase the level of service of Juban Road from its current LOS F to LOS A.

2.2.2 System Linkage

This portion of the LA 1026 roadway segment is one of the main connector roads to I-12 in Livingston Parish. This roadway is a commuter link for residents of Livingston Parish traveling west to Baton Rouge; east to New Orleans; and south to Ascension Parish and numerous industrial plants along the Mississippi River. LA 1026 links the cities of Denham Springs and Walker, numerous other communities and villages in Livingston Parish, and popular recreation areas such as North Park to the interstate system at I-12. US 190, located at the northern end of the project corridor, is an important east/west alternate route for I-12. The Juban Road Widening from I-12 to US 190 is a section of independent utility. However, if the proposed project is built, it may increase the trend of development and improve connectivity to other areas.

Other road projects on the horizon for Livingston Parish include a connecting parkway to Ascension Parish and extending Juban Road north from US 190 to Lockhart Road. It is anticipated that industrial plant expansions in Ascension Parish will continue to drive growth in southern Livingston Parish with a large percentage of the plants’

workforce coming from Livingston Parish. A parkway connecting the two parishes would provide not only smoother access for the commute, but also a vital evacuation route from Ascension and southern Livingston Parishes to I-12. The extension of Juban Road north from US 190 to Lockhart Road would provide an important north-south roadway that connects to I-12, easing commuter traffic from the northern part of the parish and providing the missing piece in what could be considered an inner loop connecting I-12 to Magnolia Bridge via Lockhart Road. The extension also would provide an important northerly route from US 190 for hurricane evacuation. Livingston Parish has hired a consultant to do a line and grade feasibility study for the extension of Juban Road north of US 190 to intersect with Lockhart Road near the Burgess Road intersection.

2.2.3 Social Demands or Economic Development

As an interchange on I-12 between Baton Rouge and New Orleans, the Juban Road area of Livingston Parish has developed at a steady pace. Land use along this portion of Juban Road is being converted from rural to commercial, and Planned Urban Developments and residential subdivisions are being established in the area. Some of the land around Juban Road has been subdivided into small lots suitable for residential and commercial development; however, there remain some large tracts of land that are used for agriculture and livestock. It is anticipated that growth along Juban Road will increase the demand for additional highway capacity. Improvements to the corridor would improve the ability of tourist, recreational, and commercial vehicles to move along the corridor more efficiently. Such efficiency is often an important economic factor for local industries.

3. Proposed Alternatives

NEPA requires that reasonable alternatives which could address the identified purpose and need be considered, including a No-Build Alternative. A range of alternatives was identified and examined against the established need for the project. Some alternatives were eliminated because they did not meet the established objectives. The alternatives that were determined to meet the project purpose and need were carried forward for further study.

3.1 Which Build Alternatives Were Initially Proposed?

A range of alternatives was considered in the development of this project. Numerous configurations were evaluated, including creating four lanes with a continuous center median, or various four-lane facilities with raised medians. Because it is the policy of LDOTD that all multi-lane roadways, independent of their roadway classification, will be designed with a median, the roadway configuration of four lanes with a continuous center median was discarded. The alternatives utilized the same highway alignment, which was considered generally acceptable, but differed in roadway configuration.

For all alternatives, the amount of required ROW varies throughout the project due to differences in limits of construction, toe of slope, amount of grading, and other similar factors. An average of 50 feet of required ROW was estimated for each side. For all alternatives, additional ROW would need to be obtained and utilities would need to be relocated. All of the alternatives would have an impact on side streets and temporary drives would need to be installed. The initial alternatives differed in the combination of median width and required ROW, which affected the extent of impacts.

Because the purpose of the project is to increase the capacity of Juban Road to relieve traffic congestion and improve access to I-12, and to modify the Juban Road intersection with US 190 (Florida Blvd) as required to improve traffic operations, the alternatives that were determined to be reasonable included versions of the four-lane divided, or

raised-median, roadway with differing horizontal clearances, which is the distance from the outside edge of the roadway to the back of the ROW. Within that concept, three alternatives were considered:

Alternative 1: UA-2 roadway with a 30-foot wide median and a 27-foot horizontal clearance spanning approximately 180-200 feet from ROW to ROW. This alternative follows along the existing alignment. LDOTD's Access Management Policy is proposed to be implemented through the use of raised medians; right-in / right-out only from residential and business driveways as well as adjacent roadways; and restricted crossing U-turn (RCUT) openings allowing U-turns and left turns with the utilization of additional pavement widening (bulb-outs). Ten-foot bicycle/pedestrian shared-use paths are included on both sides of roadway. Due to the lack of an existing sewer system along Juban Road, the utilization of roadside ditches would remain.

Alternative 1 was dismissed because of horizontal sight distance issues for vehicles in the left turn lane waiting to make a U-turn. In addition, Alternative 1 would increase potential impacts due to the greater amount of ROW required for the width of the proposed median and the retention of the roadside ditches.

Alternative 2: UA-2 roadway with a 30-foot wide median and a 27-foot horizontal clearance spanning approximately 180-200 feet from ROW to ROW. In addition to the design features of the first alternative, this alternative also reduces the number of curves along Juban Road from four to two by developing a straight roadway from the first curve at the beginning of the project to the last curve before the US 190 intersection. This alternative also utilizes RCUT locations along the alignment for U-turn movements. Ten-foot bicycle/pedestrian shared-use paths are included on both sides of roadway. Due to the lack of an existing sewer system along Juban Road, the utilization of roadside ditches would remain.

Alternative 2 was dismissed because there still remains a slight horizontal sight distance issue at the beginning of the project as well as the increased potential impacts related to the proposed median width and the need to retain the open roadside ditches. In addition, the design of the new alignment would cause the roadway to be shifted to the east near the end of the project. This shift would impede existing high voltage transmission lines that run parallel to the east side of Juban Road before crossing to the west of Juban Road just south of the US 190 intersection. The additional cost for utility relocations would be much greater than in Alternative 1 or Alternative 3.

Alternative 3: UA-2 roadway with a 5-foot wide median and a 6-foot horizontal clearance spanning approximately 170-190 feet from ROW to ROW. This alternative follows along the existing alignment with a narrower median section to help reduce the footprint of the project. LDOTD's Access Management Policy is proposed to be implemented through the use of raised medians; right-in / right-out only from residential and business driveways as well as adjacent roadways. Rather than RCUT locations allowing U-turns and left turns, three roundabouts would be constructed: one located just north of I-12; one located mid-way along the project corridor approximately 1,600 feet south of the intersection of US 190, and one located at the intersection of Juban Road and US 190. Turning movements would be routed through one of the roundabouts. Drivers wishing to turn left onto Juban Road would be required to first turn right, then travel to the next roundabout. Ten-foot bicycle/pedestrian shared-use paths are included on both sides of roadway. Curb and gutter with subsurface drainage would be installed along Juban Road and US 190.

Alternative 3 was established as the preferred Build Alternative because it requires the least amount of ROW and minimizes potential impacts to the greatest extent possible. The proposed subsurface drainage and a new sewer system would reduce the amount of required ROW. Livingston Parish is seeking to secure additional capital outlay funds to allow a sewer system to be constructed. The amount of required ROW would be reduced by the installation of subsurface drainage and the removal of the roadside ditches. The preferred Build Alternative also minimizes the

number of residential and business relocations as much as practicable while still achieving the purpose and need of the proposed project and meeting the requirements of LDOTD design criteria.

3.2 Preferred Build Alternative

The preferred Build Alternative was chosen to move forward through the Supplemental EA process because it addresses all of the aspects of the project purpose and need. The preferred Build Alternative (illustrated on Exhibits A -- C in Appendix A) incorporates the Complete Streets Policy and the Access Management Policy, both of which have been adopted by LDOTD for the construction of new roadways.

3.2.1 The Preferred Build Alternative

The existing Juban Road is classified as an Urban Minor Arterial roadway. The proposed design criteria for the road are considered to be Urban Arterial 2 (UA-2). Typical features of a UA-2 include:

- Design speed of 45 mph
- Level of Service = C
- Travel lane width: 11 – 12 feet
- Minimum horizontal clearance, from edge of travel lane: 6 – 22 feet from back of curb

The alignment of Juban Road would remain essentially the same for the preferred Build Alternative. The preferred Build Alternative would result in an improved roadway designed in accordance with current criteria. Traffic flow and traffic capacity would be increased. Typical cross sections of the proposed roadway are shown in Appendix B.

In Phase I (H.000464), the roundabout at the intersection of US 190 and Juban Road would be constructed. US 190 (Florida Blvd) would be widened from two lanes to four lanes as it approaches the new roundabout intersection with Juban Road. Curb and gutter with subsurface drainage would be installed along Juban Road and US 190. Livingston Parish is seeking to secure additional capital outlay funds to allow a sewer system to be constructed. The recently developed Juban Crossing Shopping Center built a sewer force main and tied it to the Denham Springs Sewer Pump Station. There is enough capacity at the Juban Crossing Pump Station to accept the sewer along Juban Road and US 190.

In Phase II (H.004634), Juban Road would be widened from two 12-foot wide travel lanes to four 12-foot wide travel lanes with a 5-foot wide raised median. Ten-foot bicycle/pedestrian shared-use paths are included on both sides of roadway. Two roundabouts would be constructed: one located just north of I-12 and one located mid-way along the project corridor approximately 1,600 feet south of the intersection of US 190. In addition, new frontage roads would be constructed parallel to Juban Road east and west of the second roundabout. The new frontage roads would be constructed by LDOTD as part of the Juban Road Widening Project and would be then be turned over to Livingston Parish for operation and maintenance. Due to the Access Management Policy, several driveways may be removed (Appendix E) at locations that currently have more than one driveway with direct access to Juban Road.

The proposed new roadway would have an approximate 180-foot clear roadway. The amount of required ROW varies throughout the project due to differences in limits of construction; toe of slope; amount of grading; roundabout and frontage road placement; and other similar factors. A total of approximately 14.20 acres of additional ROW would be required for the proposed project.

3.2.2 Complete Streets Policy

In July 2010, LDOTD adopted a Complete Streets Policy for the State of Louisiana as mandated by the State Legislature. The Complete Streets Policy seeks to create a comprehensive, integrated, connected transportation network that balances access, mobility, health, and safety needs of motorists, transit users, bicyclists, and pedestrians for all ages and abilities, which includes users of wheelchairs and mobility aids. The benefits of adopting the Complete Streets Policy include safety improvement, mobility and safety for children, mobility for people with disabilities, mobility for older people, promotion of active living, support of environmental policies aimed at reducing emissions, support for economic development, and lower household transportation costs. According to the provisions of the Complete Streets Policy, on all new and reconstruction roadway projects, LDOTD will plan, fund, and design sidewalks and other pedestrian facilities determined by the context of the roadway and LDOTD will provide bicycle accommodations appropriate to the context of the roadway.

LDOTD's Complete Streets Policy is proposed to be implemented through the construction of a shared-use bicycle/pedestrian path. Maintenance and liability for sidewalks and bicycle paths outside the limits of the curb or shoulder will be the responsibility of the local jurisdiction. An agreement between LDOTD and Livingston Parish will be required for the construction and maintenance of the shared-use bicycle/pedestrian paths. Exceptions for not accommodating bicyclists, pedestrians, and transit users in accordance with this policy will require approval of the LDOTD Chief Engineer. For exceptions on Federal-aid highway projects, concurrence from the FHWA must also be obtained.

When a Metropolitan Planning Organization (MPO) or local jurisdiction is not in agreement with LDOTD's accommodation for bicyclists or pedestrians, they can introduce a formal appeal by means of a resolution adopted by the local governing body or board. The resolution must be submitted to the Chief Engineer for review and consideration prior to the final design approval. This appeal process would apply if either the local government or MPO was of the opinion that the proposed facility is not needed, if they are unable to meet the maintenance burden, or if it does not go far enough to address the safety needs of the non-motorized transportation users.

3.2.3 Access Management Policy

LDOTD has adopted an Access Management Policy for the construction of new roadways. It is the policy of LDOTD that all multi-lane roadways, independent of their roadway classification, shall be designed with a median. Access management is careful planning of access connections to roadways and highways. Access connections can include driveways, streets, and other means of connecting to a roadway. The policy would be implemented through the use of a raised median and right-in/right-out only turns (i.e. no left-out turns) from connecting streets, business driveways, and personal driveways onto Juban Road.

At appropriate intervals, three roundabouts would be constructed along the route. Other turning movements would be routed through one of the roundabouts. Drivers wishing to turn left onto Juban Road would be required to first turn right, then travel to the next roundabout. In addition, ROW will be required for new frontage roads, which would be constructed parallel to Juban Road east and west of the second roundabout. The frontage roads would enhance access to existing properties and provide opportunities to support future development. Some driveways along Juban Road would be closed (Appendix E) and affected properties would be able to use the new frontage roads to access Juban Road through the new roundabout.

3.3 No-Build Alternative

In addition to the preferred Build Alternative, the alternative of taking no action is also evaluated. A No-Build Alternative is studied for purposes of comparison and for consideration in cases where adverse impacts to the environment might outweigh the benefits derived from the proposed project. The environmental effects associated with the "no action" alternative will be compared with the effects resulting from the proposed action. Where a choice of "no action" by the agency would result in predictable actions by others, these actions are considered to be consequences of the No-Build Alternative and are included in the analysis. Other planned and programmed activities, such as road maintenance, ROW maintenance, and other regional improvements, would still be performed as scheduled under the No-Build Alternative.

Under the No-Build Alternative, the proposed widening of Juban Road within the project limits would not occur. The roadway would remain as is with open ditches, 5-foot wide aggregate shoulders, and two 12-foot wide travel lanes. Future capacity concerns would not be addressed. Juban Road would remain without shared-use paths. No residential or business relocations would be required, and no potential impacts to wetlands would occur. No utility relocations would be needed. The short-term adverse impacts due to construction activity would be avoided. The No-Build Alternative is anticipated to result in continued degradation of the level of service, which is currently at LOS F.

4. Environmental Resources, Impacts, and Mitigation

This section presents a discussion of environmental resources that have the potential to be affected by the activities related to the preferred Build Alternative. How these resources could be affected by the proposed action is the foundation of the NEPA decision-making process. In cases where adverse effects cannot be avoided, consideration must be given to minimizing and mitigating them.

4.1 Environmental Conditions and Potential Effects

4.1.1 Land Use and Community Character

The proposed project area lies between the cities of Denham Springs and Walker. The northern terminus of the project corridor is located at US 190 and encompasses a number of local businesses, such as an out-patient treatment facility, an apartment complex, and a gas station. LA 16 (Range Avenue), which is the primary commercial development corridor of Denham Springs, is located approximately 1.5 miles west of Juban Road. LA 447 (Walker Road), which is the primary commercial development corridor of Walker, is located approximately 3.3 miles east of Juban Road. The southern terminus of the project corridor is located at I-12, where construction of the Juban Crossing commercial and residential development complex will soon start.

Surrounding the clusters of commercial development, the character of the corridor is rural residential. The land surrounding the corridor that is not currently used as commercial property is split fairly evenly between residential areas and natural areas. Houses are generally visible from the roadway, located on tracts of land that were once undeveloped natural land. All of the Census blocks that contain the corridor were designated as rural in the 2010 Census. In that year, the population in the city of Denham Springs averaged 1,401 persons per square mile compared to 2,983 in the city of Baton Rouge and 985 in the town of Walker.

Commercial development along Juban Road would be expected to expand along this portion of the corridor and a number of properties could lose a portion of their right-of-way along Juban Road. The intersections of Juban Road/ I-12 and Juban Road/US 190 would be expected to continue as commercial centers, with the potential for an increase

in the number of retail locations and housing units than are currently located at these intersections. The one-mile section between I-12 and US 190, where there would be a raised median and roundabouts, would impact the residential context by creating a more urban look and feel. The Juban Road Widening from I-12 to US 190 is a section of independent utility. However, if the proposed project is built, it may increase the trend of development and improve connectivity to other areas.

Currently, construction is still underway on the new Juban Crossing retail development located on Juban Road near I-12. The Juban Crossing Shopping Center recently opened for business with five stores open by the last week of October 2014, and even more stores opening in November. The proposed widening project may further enhance future business development in the area.

Other road projects on the horizon for Livingston Parish include a connecting parkway to Ascension Parish and extending Juban Road north from US 190 to Lockhart Road. It is anticipated that industrial plant expansions in Ascension Parish will continue to drive growth in southern Livingston Parish with a large percentage of the plants' workforce coming from Livingston Parish. A parkway connecting the two parishes would provide not only smoother access for the commute, but also a vital evacuation route from Ascension and southern Livingston Parishes to I-12. The extension of Juban Road north from US 190 to Lockhart Road would provide an important north-south roadway that connects to I-12, easing commuter traffic from the northern part of the parish and providing the missing piece in what could be considered an inner loop connecting I-12 to Magnolia Bridge via Lockhart Road. The extension also would provide an important northerly route from US 190 for hurricane evacuation. Livingston Parish has hired a consultant to do a line and grade feasibility study for the extension of Juban Road north of US 190 to intersect with Lockhart Road near the Burgess Road intersection.

The preferred Build Alternative is not expected to limit accessibility to community activities, induce substantial changes in neighborhood character, or result in a major disruption of neighborhood cohesion. Long-term negative social impacts on the area attributed to the preferred Build Alternative result mainly from the proposed relocations.

The No-Build Alternative is anticipated to result in on-going deterioration of the level of service. Although no residential or business relocations would be required under the No-Build Alternative, the proposed design improvements would not be made and traffic congestion would be projected to increase.

4.1.2 Economic Activities

There are approximately 15 businesses in the corridor, including some home-based businesses and occupations. Some of these businesses include a gas station, two industrial supply facilities, a t-shirt shop, an outdoor equipment shop, a mobile home park, an apartment complex, and a medical complex. Most of the businesses within the project corridor are located along US 190. Acquisition of the required ROW would affect businesses by reducing the amount of their roadway frontage. It is anticipated that five business relocations may occur. A listing of anticipated relocations is provided in Appendix D.

The proposed project would affect access patterns. Left turns would be routed through roundabouts, which would change the way some businesses are accessed. The addition of two lanes would improve traffic flow and would be expected to offset any impacts from the left turn limitations. It is expected that the proposed construction project would produce short-term adverse impacts during the construction phase as is typical during most highway construction projects. Persons who use the roadway would be temporarily inconvenienced during the construction phase due to construction activity.

4.1.3 Relocations of Residences and Businesses

The ROW required for the proposed project would impact between 80 and 90 properties by taking a portion of their frontage in order to construct the new travel lanes, the shared-use paths, the frontage roads, and the "clear zone," which is an unobstructed, relatively flat area beyond the edge of the roadway that allows a driver to stop safely or regain control of a vehicle that leaves the roadway. The shared-use paths are located within the clear zone. The acquisition of ROW does not necessarily constitute a relocation impact.

The width of the corridor currently owned by LDOTD along this portion of Juban Road is approximately 80 feet. Many structures are set back from the roadway by a sufficient distance to put them outside the limits of the ROW required for the proposed project. However, an estimated twenty-five (25) residences and five (5) businesses within the proposed ROW on both sides of the existing roadway are anticipated to be relocated. Determination of the exact displacements will be dependent upon the final roadway design.

The availability of replacement housing and land for residential and business displacements was examined. It was determined that at the time of report preparation, replacement housing is adequate in the areas of displacement. Based on past experience, it is likely that the majority of the owner-occupants being displaced will relocate on their remainder properties (retain and move back or construct new). It is not anticipated that there will be any unusual problems in securing replacement housing under normal procedures. Some new construction may be necessary to replace some of the structures displaced by construction of the widened roadway. A listing of anticipated relocations is provided in Appendix D.

4.1.4 Environmental Justice and Demographics

Environmental justice is the fair treatment and meaningful involvement of all people regardless of race, color, national origin, educational level, or income with respect to the development, implementation, and enforcement of environmental laws. Environmental justice seeks to ensure that minority and low-income communities have access to public information relating to human health and environmental planning, regulations, and enforcement. Environmental justice ensures that no population, especially the elderly and children, are forced to shoulder a disproportionate burden of the negative human health and environmental impacts of pollution or other environmental hazards.

Title VI of the Civil Rights Act (42 United States Code [USC] 2000) and Executive Order 12898 - Federal Actions to Address Environmental Justice in Minority Populations and Low-Income Populations (1994), requires an environmental justice review, which entails a thorough evaluation of project effects to persons belonging to the low-income populations and the following minority groups at a minimum:

- Black;
- Asian;
- American Indian and Alaskan Native;
- Native Hawaiian or Other Pacific Islander; and
- Hispanic (of any race.)

From 2000 to 2010, Livingston Parish experienced an increase in population of approximately 39.4 percent, growing from 91,814 to 128,026 persons. The population in Denham Springs grew from 8,757 to 10,215 persons, an approximately 16.7 percent increase. By comparison, the State of Louisiana exhibited a growth rate of 1.4 percent, from 4,468,976 to 4,533,372 persons, during the same period.

According to the 2010 Census, the proposed project area is contained within one Census tract, Tract 405. There were 1,176 persons living within the 13 census blocks of Census Tract 405 that contain the limits of construction of the project. However, these census block geographies are large and bounded by more than one roadway; therefore, it can be deduced that not all of the individuals counted in the blocks in 2010 lived along the corridor within the limits of construction. Utilizing aerial photography, it is possible to estimate that there are approximately 86 households in residences within or adjacent to the project corridor between the limits of construction. According to the 2007-2011 U.S. Census American Community Survey 5-Year Estimates, the average number of persons per household in Livingston Parish was 2.83. Therefore, a reasonable estimate of the number of persons that would be directly affected by the proposed project is 243.

A review of the race and ethnicity data for the census blocks within the project limits was conducted to determine if any minority group(s) would be disproportionately affected by impacts associated with the proposed project. The results of this review are provided in Table 4.1.

Table 4.1 Race and Ethnicity by Census Block

Census Geography		Total Population	Black		American Indian and Alaskan Native		Asian		Native Hawaiian or Other Pacific Islander		Some other Race	
			Pop	%	Pop	%	Pop	%	Pop	%	Pop	%
Tract 405	Block 4003	126	0	0.0	0	0.0	0	0.0	0	0.0	11	8.7
	Block 4004	28	0	0.0	0	0.0	2	7.1	0	0.0	0	0.0
	Block 4005	233	16	6.9	0	0.0	0	0.0	0	0.0	4	1.7
	Block 4006	20	0	0.0	0	0.0	0	0.0	0	0.0	0	0.0
	Block 4013	202	21	10.4	2	1.0	16	7.9	0	0.0	1	0.5
	Block 4015	2	0	0.0	0	0.0	0	0.0	0	0.0	0	0.0
	Block 4017	4	0	0.0	0	0.0	0	0.0	0	0.0	0	0.0
	Block 4018	4	0	0.0	0	0.0	0	0.0	0	0.0	0	0.0
	Block 4019	62	0	0.0	1	1.6	0	0.0	0	0.0	0	0.0
	Block 4031	480	0	0.0	4	0.8	4	0.8	1	0.2	13	2.7
	Block 4032	0	0	0.0	0	0.0	0	0.0	0	0.0	0	0.0
	Block 4033	15	0	0.0	0	0.0	0	0.0	0	0.0	1	6.7
	Block 4034	0	0	0.0	0	0.0	0	0.0	0	0.0	0	0.0
All Blocks		1176	37	3.1	7	0.6	22	1.9	1	0.1	30	2.6
Livingston (2010)		128,026	6,505	5.1	526	0.4	628	0.5	26	0.0	2,740	2.1
Louisiana (2010)		4,533,372	1,452,396	32.8	55,079	1.2	84,335	1.9	4,879	0.1	85,725	1.9

Source: United States Census, American Fact Finder QT-P5 Race Alone or in Combination: 2010 Census Summary Fact File

According to the 2010 Census, most residents within the limits of construction of the corridor were not members of any minority. As detailed in Table 4.1, approximately 8.2 percent of the population in the Census Blocks adjacent to Juban Road was non-White. The non-White percentage of the population in Livingston Parish and the State was 8.1 and 37.9 percent, respectively. The non-White percentage of the population in the project area is lower than that of the State, and more aligned with that of the Parish. African-Americans comprised the largest non-White populations in the project area (3.1 percent).

In addition to identifying whether a proposed action affects minority populations, the environmental justice discussion must include a review of whether any low-income population would be disproportionally affected. Because income data is not available on a census block level, the Census Tract economic data was utilized for this review. The income data for the aforementioned Census Tract 405 are identified in Table 4.2.

Table 4.2 Household Income and Poverty Levels by Census Tract

Census Geography	Median Family Income	Families with Income below the Poverty Level	Families with Income below $10,000
Census Tract 405	$67,500	6.8%	111 (3.8%)
Livingston Parish	$61,456	13.8%	2,381 (6.9%)
Louisiana	$54,059	15.5%	73,860 (6.6%)

Source: U.S. Census, American Fact Finder DP03 Selected Economic Characteristics 2012 American Community Survey 1-Year Estimates

The median family income in Census Tract 405 is higher than that of both the Parish and State. Conversely, the percent of families with income below the poverty level for the tract is below that of both the Parish and State. The small percentage of minorities and low-income persons within the census tract indicates that the proposed project would not disproportionally affect an identified minority or low-income population.

The project would not affect any known unique social groups. There is no information to suggest that any person's civil rights will be violated, as set forth in the U.S. Department of Transportation (DOT) regulations relating to Title VI of the Civil Rights Act of 1964**.** There are no known disproportionately high or adverse effects borne by minority and/or low-income populations.

4.1.5 Cultural Resources

The National Historic Preservation Act (NHPA) establishes policies for protecting historic properties. Under Section 106 of the NHPA, federal agencies are required to evaluate the effect federal actions (including funding of actions) have on historic properties. The NHPA established the National Register of Historic Places (NRHP) and state historic preservation programs administered by a State Historic Preservation Officer (SHPO). Historic properties and archaeological sites are physical resources that also represent cultural values and human history. Special consideration must be given to the effects of the proposed project upon any district, site, building, structure, or object that is included or eligible for inclusion in the National Register of Historic Places (NRHP) as required by Section 106 of Public Law 89-665; 80 Stat. 915; 16 USC 470 as amended, also known as the National Historic Preservation Act. These properties are also afforded protection under Section 4(f) of the United States Department of Transportation Act of 1966 (see Section 4.1.6.)

In order to meet the requirements of these acts, a Cultural Resources investigation was completed in December 2013. The investigation was performed in accordance with guidelines provided by the Louisiana Division of Archaeology and the Louisiana Office of Historic Preservation within an Area of Potential Effect (APE), which is coincident with the project corridor. Staff from the LDOTD Environmental Section searched the Louisiana Divisions of Historic Preservation and Archaeology GIS databases to identify existing archaeological sites, standing structures, and districts listed or deemed eligible for inclusion on the NRH within or adjacent to the project area.

Staff from LDOTD conducted a Phase I Cultural Resources Survey (CRS) of the APE to determine whether there were standing structures or archaeological deposits of National Register eligibility in the project area. Approximately 13.976 acres of additional ROW will be required for the proposed project. A visual inspection for standing structures greater than 50 years of age and located within or adjacent to the APE was also conducted. Systematic shovel testing was performed to detect possible archaeological deposits. No previously recorded archaeological sites, historic structures, or historic districts were identified within the APE of the project area. The detailed results of the

Phase I CRS are presented in a separate technical report. It is anticipated that there will be a finding of no historic properties affected. Coordination with the Louisiana State Historic Preservation Officer is being carried out.

Three federally recognized Native America Tribes responded to the Solicitation of Views: the Alabama-Coushatta Tribe of Texas, the Jena Band of Choctaw Indians, and the Choctaw Nation of Oklahoma. The Alabama-Coushatta Tribe of Texas determined that no known impacts to cultural assets of the Tribe are anticipated in conjunction with the proposed project. However, in the event of inadvertent discovery of human remains and/or archaeological artifacts, they request that activity in proximity to the location must cease and their office shall be consulted. The Choctaw Nation of Oklahoma indicated that Livingston Parish is located within the historic area of interest for the Tribe. Per their request, a copy of the archaeological surveys and the SHPO comments regarding this project, as well as the official finding of effects on historic properties within the APE will be forwarded to the Choctaw Nation of Oklahoma and the Jena Band of Choctaw Indians upon receipt.

4.1.6 Section 4(f) Resources

Section 4(f) of the DOT Act requires that the FHWA and other DOT agencies consider the publicly owned parks, recreational areas, wildlife and waterfowl refuges, or public and private historic sites affected by their respective undertakings. Under the provisions of the Act, a federally-assisted highway project cannot adversely take a designated 4(f) property unless it can be shown that there is no prudent and feasible alternative to doing so. Section 4(f) applies when there is an actual taking of land from, or constructive use of, a 4(f) property. No 4(f) properties are located within the proposed project area.

4.1.7 Section 6(f) Resources

State and local governments often obtain grants through the Land and Water Conservation Fund (LWCF) Act to acquire or make improvements to parks and recreational areas. Section 6(f) of the Act prohibits the conversion of property acquired or developed with these grants to a non-recreational purpose without the approval of the Department of the Interior's (DOI) National Park Service (NPS.) Section 6(f) directs the DOI to assure that replacement lands of equal value, location, and usefulness are provided as conditions to such conversions. Consequently, where conversions of Section 6(f) lands are proposed for highway projects, replacements will be necessary. The proposed project would not result in the conversion of a designated 6(f) resource.

The Department of Culture, Recreation & Tourism, Office of State Parks, through its SOV response, stated that no parks, sites, or other recreational areas are located near this project and they have no objections or concerns.

4.1.8 Community Facilities, Services, and Social Resources

There are no essential services or community facilities within the project corridor, but there are a few within driving distance of the project area. Most community institutions are located in the central part of Denham Springs about 1.5 miles west of the western terminus of the project corridor and in the central part of Walker about 3 miles east of the eastern terminus of the project corridor. Public schools in the vicinity of the project corridor include one elementary school, two middle schools, and one high school. No schools are located within or adjacent to the project area. The Livingston Parish Library Denham Springs -- Walker Branch is located just west of the project corridor along US 190. There are no venues within the corridor that provide space for community activities; however, the PARDS North Park facility is located less than a mile north of the project corridor along Eden Church Road.

Gulf States Long Term Acute Care Hospital of Denham Springs is located at the northwest corner of the intersection of US 190 and Juban Road. There is also one residential living facility for the elderly located along US 190 just east of Juban Road. There are no church facilities or cemeteries located within the limits of construction of the project. The current plans for the project do not directly impact an Entergy substation located along US 190 just west of Juban Road as no ROW is required at the location.

The properties that directly front US 190 are predominantly commercial and include a gas/convenience store, industrial supply businesses, and retail facilities. The proposed improvements to the roadway are expected to enhance community access and utilization of these commercial resources. Due to the widening of US 190 as it approaches the intersection of Juban Road, right-of-way will be required from the properties along US 190. Some of the required parcels may necessitate relocation of some of these commercial properties.

4.1.9 Wildlife and Protected Species

Section 7 of the Endangered Species Act of 1973 requires federal actions (e.g., project approvals, funding, other actions) to be implemented so that neither the existence of species listed as protected nor their habitat is jeopardized. The U.S. Fish and Wildlife Service (USFWS) is charged with implementing the Endangered Species Act and with maintaining a list of protected plants and animals and their protection status. The Louisiana Natural Heritage Program (LNHP) maintains sighting records of federally protected species and species of state concern.

According to the USFWS, the proposed project has been reviewed for effects to Federal trust resources under their jurisdiction and currently protected by the Endangered Species Act and they have determined that the project, as proposed, will have no effect on those resources.

According to the LDWF, Habitat Section of the Coastal & Nongame Resources Division, no impacts to rare, threatened, or endangered species or critical habitats are anticipated for the proposed project. No state or federal parks, wildlife refuges, scenic streams, or wildlife management areas are known at the specified site within Louisiana's boundaries.

4.1.10 Wetland Reserve Program

The project corridor does not contain any known property in the Natural Resources Conservation Service (NRCS) Wetland Reserve Program.

4.1.11 Wetlands and Other Waters

Section 404 of the Clean Water Act requires anyone depositing dredged or fill material into waters of the U.S., including wetlands, to receive authorization for such activities. The United States Army Corps of Engineers (ACOE) has been assigned responsibility for administering the Section 404 permitting process and makes the determination of whether or not wetlands fall under their jurisdiction.

Field studies were conducted on November 8, 2013 to determine the presence of wetlands and other waters of the U.S. within the project limits. All wetlands located in the survey were delineated using the three parameters (dominant vegetation, soil characteristics, and hydrology) and methods described within the *1987 Corps of Engineers' Wetlands Delineation Manual and 2010 Regional Supplement to the Corps of Engineers Wetland Delineation Manual: Atlantic and Gulf Coastal Plain Region, Version 2.0.*

The project limits are located within the Amite Watershed. Included within the project limits is a multi-barrel box culvert along US 190 spanning an unnamed creek, which is a tributary of Gray's Creek, which itself drains to the Amite River. It is the conclusion of staff biologists of the LDOTD Environmental Section that the proposed widening of Juban Road would impact approximately 8.665 acres of potentially jurisdictional wetlands and 0.113 acre of potentially jurisdictional other waters of the U.S.

The ACOE will make the final determination as to whether these areas are to be considered jurisdictional wetlands. Mitigation requirements for wetland loss may require creation of acreage off-site in an approved wetland mitigation area. The final mitigation requirements will be determined based upon the functions and values of the impacted wetlands. The Wetland Finding can be found in a separate technical report.

4.1.12 Floodplains

Floodplains are areas flooded during storm events. The 100-year floodplain is defined as the area that would be inundated by a precipitation event that has a 1-in-100 chance of occurring every year. Floodplains are protected by Executive Order 11988, Floodplain Management; 23 Code of Federal Regulations Part 650, *Location and Hydraulic Design of Encroachments on Floodplains*; and DOT 5650.2, *Floodplain Management and Protection*. These regulations require that encroachments within the 100-year floodplain are minimized and that land development inconsistent with floodplain values is avoided.

The existing Juban Road and US 190 roadways generally follow the higher elevations in the area. Through the project area, Juban Road lies between the 36-foot and 41-foot (above mean sea level) contour and US 190 lies between the 39-foot and 46-foot (above mean sea level) contour; however, the existing roadways do traverse areas that are considered to be within the 100-year flood plain. The proposed project limits are located within both Zone AE and Zone A, the base floodplains. Even though the proposed project will be constructed with required ROW, it would not impact natural or beneficial floodplain values. No significant encroachment of the floodplain would result from the construction of the proposed widening project. No flood hazard would result from development of the proposed project.

LDOTD Floodplain Management commented that during and after construction, consideration must be given for the occurrence of a base flood inundation. Also, consideration must be given to the responsibility for cleaning debris and keeping the surrounding area clear so as not to interfere with its function.

Livingston Parish Floodplain Management commented that they do not foresee any effect the construction will have on the floodplain areas, as long as the rivers, creeks, and drainage ditches do not get blocked or choked down due to erosion silting or construction debris.

4.1.13 Coastal Resources and Essential Fish Habitat

The project corridor is outside the Louisiana Coastal Zone and does not encompass any marine or estuarine habitats. No Coastal Use Permit is required.

4.1.14 Subsurface Water

The EPA defines a sole source aquifer as an underground water source that supplies at least 50 percent of the drinking water consumed in the area overlying the aquifer. These areas have no alternative drinking water source(s) that could physically, legally, and economically supply all those who depend upon the aquifer for drinking water.

The proposed project corridor is located on the Southern Hills aquifer system, which has been designated a sole source aquifer by the EPA. The EPA has determined that the project, as proposed, should not have an adverse effect on the quality of the ground water underlying the project site.

4.1.15 Wild, Scenic, and Natural Rivers

The National Wild and Scenic Rivers System was created by Congress in 1968 to preserve rivers possessing outstanding natural, cultural, and recreational values. The system safeguards characteristics while recognizing the potential for their appropriate use and development. In 1970, the Louisiana Legislature created the Louisiana Natural and Scenic Rivers System. The System was developed for the purpose of preserving, protecting, developing, reclaiming, and enhancing the wilderness qualities, scenic beauties, and ecological regimes of selected free-flowing streams in Louisiana. No streams in the project corridor are designated as scenic by the National Wild and Scenic Rivers System or the Louisiana Natural and Scenic Rivers System.

4.1.16 Navigable Waterways

The proposed project does not cross a navigable waterway.

4.1.17 Farmland

Farmland is a natural resource that is a major factor in rural economics. NEPA and the provisions of the Farmland Protection Policy Act (FPPA) require that before taking or approving any federal action that would result in conversion of farmland, the federal agency must examine the effects of the action using the criteria set forth in the Act. If adverse effects to farmland are identified, the project proponent must consider alternatives to lessen them. Neither NEPA nor FPPA requires a project to be modified solely to avoid or minimize the effects of conversion of farmland to nonagricultural uses.

The NRCS has determined that the proposed construction will not impact prime farmland and therefore is exempt from the rules and regulations of the FPPA.

4.1.18 Noise

The proposed project uses federal funds to add capacity to the roadway; therefore, a noise analysis is required using LDOTD's noise policy. As part of the proposed project to widen LA 1026 (Juban Road), a noise study was conducted to determine impacts to adjacent property owners. The majority of Juban Road is residential with a few commercial properties. The detailed results of this study are in a separate technical report; however, a summary has been provided below.

Aerial photos and topographic maps were used to digitize the roadway and receivers in the Traffic Noise Model (TNM) version 2.5. Detailed traffic data from the LDOTD Planning Section was also collected and entered into the computer model. A field visit was conducted to collect field measurements to validate the accuracy of the model. The model was validated and then used to predict the noise levels for three scenarios: the current noise levels (2014), the future No-Build noise levels (2034), and the future Build noise levels (2034).

The TNM predicts that there are currently thirty-two (32) impacted receivers. The future No-Build noise level simulation predicts future noise levels resulting from the increased traffic volume. The TNM predicts that this future No-Build scenario would impact thirty-four (34) receivers. The future Build noise level simulation predicts the future

noise levels caused from both the increase in traffic volume and the highway improvements. The TNM predicts this future Build scenario would impact thirty-two (32) receivers. A business is determined impacted if the dBA is 71 or higher, while a residential property is determined impacted if the dBA is 66 or higher. A receiver can also be impacted if the future noise level exceeds the existing noise level by 10 dBA. The affected receivers in this project were impacted due to the noise levels exceeding the 66 or 71 dBA thresholds. None of the receivers were impacted based on the 10 dBA criteria.

Table 4.3 Number of Impacted Receivers

	Current	2034 No Build	2034 Build
Number of Impacted Receivers	32	34	32

Source: LDOTD Highway Traffic Noise Impact and Abatement Study November 2014

Most of the impacted receivers adjacent to Juban Road have driveways that directly tie into the roadway. To preserve access to the highway would require that the noise barrier have gaps at each driveway. The gaps would render the barrier ineffective at reducing the sound levels for the receivers. Discontinuous noise barriers generally cannot achieve an eight-decibel insertion loss required by the LDOTD's noise policy; therefore, a detailed analysis of a noise barrier was not performed. The location and distance from the roadway of the impacted noise receivers is shown in Figure 2.

Approximate locations of the 71 dBA noise contour and the 66 dBA noise contour are determined in order to help the local communities with planning. For planning purposes, once the new roadway has been constructed, the 66 dBA threshold line is approximately 216 feet from the centerline of the roadway and the 71 dBA is approximately 128 feet from the centerline of the roadway.

4.1.19 Air Quality

The EPA established criteria for evaluating air quality in accordance with the 1990 Clean Air Act Amendments. The standards set by the EPA are known as the National Ambient Air Quality Standards (NAAQS). The EPA and LDEQ regulate air quality in Louisiana. Air sheds that do not meet the NAAQS are known as non-attainment areas and require special consideration.

Livingston Parish is designated as a moderate non-attainment parish for 8-hour ozone. Due to the parish's status as an air quality non-attainment area, a comparative study was done with the Perkins Road widening project (SP No. 700-17-0159) in East Baton Rouge Parish. Use of past carbon monoxide (CO) analyses as a historical database may be used in lieu of modeling to determine possible impacts to air quality. This was authorized in the March 30, 2004 memorandum from FHWA to LDOTD.

The 1999 Perkins Road widening project in East Baton Rouge Parish is one of the most recent projects for which a CO analysis was performed. This project widened Perkins Road (LA 427) from two lanes to four lanes with an undivided center turn lane. It was widened between Essen Lane and Siegen Lane, approximately 2.8 miles. The Juban Road widening project will widen Juban Road from two lanes to four lanes with a raised median and access management, including roundabouts. The proposed project will start at I-12 and end at US 190. The existing and future peak traffic volume for Juban Road is less than the existing and future peak volume for Perkins Road.

Figure 2

N
Juban Road Noise Receivers
0
0.05
0.1
Miles
Legend:
Modeled Receiver
Current year
Future Build
Future No Build
Not Impacted
Impacted
duplicate receiver
DOTD
LOUISIANA DEPARTMENT OF
TRANSPORTATION & DEVELOPMENT

Table 4.4 Peak Traffic Volumes for Perkins Road and Juban Road and Modeled Carbon Monoxide Concentrations for Perkins Road

Location	Existing Peak Volume (veh/hr)	Future Peak Volume (veh/hr)	Modeled Worst-Case CO Conc. (ppm)					
			Existing		2020 No-Build		2020 Build	
			1-hour	8-hour	1-hour	8-hour	1-hour	8-hour
Perkins Rd: Essen-Hyacinth	2,745	4,630	4.8	4.7	6.7	6.7	5.8	6.0
Perkins Rd: Hyacinth to Bluebonnet	2,115	3,265	3.6	3.8	5.7	6.0	4.1	4.9
Perkins Rd: Bluebonnet to Siegen	1,990	3,410	3.8	4.0	5.3	5.7	3.1	5.3
				NAAQS				
Juban Rd: I-12 to Orchard	1,104	3,285		**1-hour**	**8-hour**			
Juban Rd: Orchard to US 190	1,877	2,789		35.0	9.0			

As Table 4.4 shows, the existing and predicted peak traffic volume for Perkins Road is greater than Juban Road. The modeled carbon monoxide concentrations for the preferred Build Alternative are less than the No-Build Alternative and are significantly less than the NAAQS. Since no violations of the CO thresholds were modeled for the Perkins Road project, which had greater projected traffic volumes than the proposed project, no violations of the thresholds would be expected with the proposed project.

Air quality impacts due to construction operations for the proposed highway improvement project are expected to be short-term, minor, and localized. These impacts are anticipated to be minimized by following the procedures outlined in the LDEQ Air Quality Regulations governing fugitive emissions of particulate matter during road construction activities (LAC 33:III.1305). The proposed project is in the current conforming Metropolitan Transportation Plan. Phase I (H.000464), which consists of the construction of the roundabout at US 190, is in the Transportation Improvement Program for the Baton Rouge Metropolitan Planning Area. Phase II (H.004634), which consists of the widening (construction) of Juban Road, is in Stage 2 for conformity.

4.1.20 Potential Hazardous Waste Sites

A separate Phase I Environmental Site Assessment (ESA) was conducted for the proposed project ROW for all alternatives. A potential "recognized environmental condition" (REC) is defined by the American Society for Testing and Materials (ASTM) as follows:

> "The presence or likely presence of any hazardous substances or petroleum products on a property under conditions that indicate an existing release, a past release, or a material threat of a release of any hazardous substances or petroleum products into structures, on the property or into the ground, groundwater, or surface water of the property. The term includes hazardous substances or petroleum products even under conditions in compliance with laws. The term is not intended to include *de minimis* conditions that generally do not present a material risk of harm to public health or the environment and that generally would not be the

subject of an enforcement action if brought to the attention of appropriate governmental agencies. Conditions determined to be *de minimis* are not recognized environmental conditions (ASTM E1527-05)."

Based on this definition, properties that currently contain underground storage tanks (USTs), or contained them in the past, are considered to be potential RECs. During the Phase I ESA, two sites containing current USTs were found. One site is a gas station, Juban Express, located on the southwest corner of Juban Road and US 190, but according to the record search of the LDEQ database, this site is currently in compliance and does not have evidence of any gasoline release in the past. The second site is a gas station, Cracker Barrel, located on Juban Road south of I-12 and will not have any impact on this project. LDEQ records indicate that this site is in compliance. Since neither of the gas stations in or near the project area have any indication that there has been a leak, these stations are not considered RECs.

Most of the sites that are of concern along Juban Road are located south of I-12 and will not be impacted by this project. These sites include a Cracker Barrel gas station, a dry cleaners, a dentist office, a mechanic shop, and a car wash. These sites are outside of the project limits and would not pose any risk to the widening of Juban Road. There are several structures, primarily residences, which may be impacted by the preferred Build Alternative. Due to the age of the structures, lead paint and some asbestos-containing materials may be associated with the standing homes and businesses that may be displaced by the preferred Build Alternative; however, these issues are not considered to be RECs. Detailed information on the Phase I ESA can be found in the separate technical report.

4.1.21 Travel Patterns

The proposed project would add an additional travel lane in each direction to the existing roadway facility. In addition, the modifications to the intersection at US 190 would add a roundabout to access Juban Road. The proposed additional travel lanes would improve mobility and would ease predicted congestion within the project area.

Travel patterns along Juban Road would not be expected to change for through traffic, such as commuter flow; however, travel for residents, customers, and employees destined for homes and businesses on the proposed project corridor would be affected by the restriction on left-turns imposed by the median. Turning movements other than right turns would be routed through one of the roundabouts. Drivers wishing to turn left onto Juban Road would be required to first turn right, then travel to the next roundabout. Some redundant driveways along the entire project length of Juban Road would be closed (Appendix E) in order to implement the Access Management Policy.

New frontage roads, which would be constructed parallel to Juban Road east and west of the second roundabout, are proposed. The frontage roads would enhance access to existing properties. Some affected properties would use the new frontage roads to access Juban Road through the new roundabout.

4.2 Constructability

The preferred Build Alternative was analyzed to determine the most appropriate sequencing of construction to minimize impacts to traffic on Juban Road and US 190. The existing lanes would be maintained and the section of Juban Road from I-12 to US 190 would be constructed in stages. Minimal traffic management at the intersections and tie-in points would be necessary.

During Phase I, the roundabout at the intersection of US 190 and Juban Road would be constructed under traffic. Initially, the outside lanes of the roundabout would be built. Traffic would then be transitioned to the newly constructed

lanes as the new roundabout is completed. It is anticipated that the US 190 construction would be completed though widening of the existing roadway, then finished with a mill and overlay of the existing surface.

During Phase II, it is anticipated that new outside lanes and subsurface drainage would be constructed along Juban Road from I-12 to the US 190 intersection while maintaining traffic on the existing Juban Road roadway. The outside lanes of the roundabouts would also be built at this time. Then, traffic would be shifted to the newly constructed outside lanes of Juban Road with temporary pavement at the roundabouts to connect the newly constructed lanes and allow traffic to make U-turns. All left turn movements would be routed through the roundabouts. The inside lanes and medians would then be constructed.

4.3 Indirect Effects

The purpose of the project is to upgrade the capacity of Juban Road to relieve traffic congestion and improve access to I-12. As an indirect effect, construction of the proposed project may enhance economic development, improve access for tourists, and improve access to recreational facilities. Agricultural and sparsely developed land may be converted to more intense uses. This change would be expected to alter the rural character of the corridor. New development would eventually cause environmental impacts from the loss of open space and natural habitat.

4.4 Cumulative Impacts

Cumulative impacts are those resulting from the incremental impacts of the proposed project as well as those of past, present, and foreseeable future actions. If the proposed project is built, it may increase the trend of development eastward from Denham Springs. It may also improve connectivity to other area recreation destinations, such as North Park, thereby attracting more visitors. Cumulative impacts may be most pronounced on open spaces and natural habitat because these resources may be converted for commercial or residential development. All of these factors may increase the impact on the rural character of the corridor over time.

Currently, construction is still underway on the new Juban Crossing retail development located on Juban Road near I-12. The Juban Crossing Shopping Center recently opened for business with five stores open by the last week of October 2014, and even more stores opening in November. The proposed widening project may further enhance future business development in the area.

Other road projects on the horizon for Livingston Parish include a connecting parkway to Ascension Parish and extending Juban Road north from US 190 to Lockhart Road. It is anticipated that industrial plant expansions in Ascension Parish will continue to drive growth in southern Livingston Parish with a large percentage of the plants' workforce coming from Livingston Parish. A parkway connecting the two parishes would provide not only smoother access for the commute, but also a vital evacuation route from Ascension and southern Livingston Parishes to I-12. The extension of Juban Road north from US 190 to Lockhart Road would provide an important north-south roadway that connects to I-12, easing commuter traffic from the northern part of the parish and providing the missing piece in what could be considered an inner loop connecting I-12 to Magnolia Bridge via Lockhart Road. The extension also would provide an important northerly route from US 190 for hurricane evacuation. Livingston Parish has hired a consultant to do a line and grade feasibility study for the extension of Juban Road north of US 190 to intersect with Lockhart Road near the Burgess Road intersection.

Overall, the proposed project will serve the surrounding area by better facilitating traffic through the corridor. As stated in Section 2.2, Juban Road is expected to see a substantial increase in traffic volume by year 2034. The cumulative impact of these projects is anticipated to be beneficial to the motoring public. The enhanced north-south

corridor will allow for more efficient travel to and from both US 190 and I-12. The increased interconnectivity between I-12 and US 190 will provide better access to the cities of Denham Springs and Walker.

4.5 Mitigation of Adverse Impacts

An approach toward planning and development of road projects has evolved from the early NEPA practices of FHWA and the state transportation agencies. Called Context Sensitive Solutions (CSS), it is a philosophy that grew out of the realization that no transportation facility can be efficiently developed without consideration of site-specific issues. Just like the NEPA process, CSS is a process that examines multiple alternatives and results in consensus (AASHTO/FHWA 2007). It responds to concerns over community values as well as social, economic, and environmental constraints through a creative and sensitive application of design criteria guidelines and standards (TRB 2002).

As discussed in Section 3, the identification, evaluation, and selection of the preferred Build Alternative focused on mitigating impacts by consistently choosing ways to reduce the amount of ROW that will be needed for the proposed project. Critical to the minimization of ROW impacts was the decision by LDOTD to reduce the median width from 30 feet to 5 feet and to reduce the horizontal clearance from 27 feet to 6 feet for the length of the project.

The objective of the development of the preferred Build Alternative was to avoid impacts to structures to the greatest extent possible and to reduce the amount of required ROW by adjusting design features. At the same time, the project corridor will be enhanced by the addition of shared-use paths. The alignment of the preferred Build Alternative locates the new median and lanes where they would cause the fewest overall impacts.

The preferred Build Alternative, illustrated on Exhibits A - C in Appendix A, would require removal of the existing roadway with construction of four new lanes and a median to replace it. In addition, adjustments to the standard design of the roadway were necessary to minimize the ROW needs. These features include the addition of subsurface drainage in some locations as well as adjustments to the slopes and profiles of the highway.

The benefits of a contextual solution sometimes outweigh cost considerations and CSS is a proactive way to avoid adverse impacts that would otherwise have to be mitigated. For those impacts that cannot be avoided, mitigation measures, as described below, would be implemented.

4.5.1 Acquisition of Right-of-Way and Relocations

The number of impacts from relocations can be mitigated by reducing the amount of required ROW and by aligning the roadway to avoid as many structures as possible. From the outset, LDOTD and FHWA understood the need to minimize the ROW requirements by considering its design elements. By reducing the proposed project median width from 30 feet to 5 feet and the average required ROW from 190 feet to 180 feet, the number of affected structures was reduced. A listing of anticipated relocations is provided in Appendix D.

Acquisition of ROW and relocation activities are governed by the federal Uniform Relocation Assistance and Real Property Acquisition Policies Act of 1970 (Relocation Act). Relocation programs available through LDOTD to displaced residents can include relocation assistance, moving payments, and replacement housing payments, as well as rent supplements. Acquisition of ROW and relocations will be handled in accordance with LDOTD's Acquisition of Right-of-Way and Relocation Assistance Program. During ROW acquisition, each property with a taken structure will be assigned a relocation officer from LDOTD. The relocation officer will be the point of contact for the residents and businesses during transition from existing to new properties. No person or family will be displaced until comparable

replacement housing has been offered or provided to the displaced resident within a reasonable time prior to displacement.

In some instances, only a portion of the commercial or residential property will be taken and it may be possible for the business or residential structure to be relocated to the remainder. This option is particularly attainable in rural or semi-rural areas, where properties are large. The number of available properties in rural areas also provides a greater opportunity for relocation in the general area of the displacement.

It is anticipated that sufficient replacement home lots and housing units are available in the region to accommodate the potential residential relocation. If comparable replacement housing is not available at the time of negotiations, or if the displaced resident cannot afford it, LDOTD may use the Last Resort Housing program, which provides flexibility in the relocation program to ensure all displaced residents are provided decent, safe, and sanitary housing.

4.5.2 Wetlands and Other Waters

To ensure no net loss of wetlands, unavoidable wetlands impacts within the project corridor would be compensated according to an approved mitigation plan developed during the permit process. To mitigate potential water quality impacts to surface waters, the proposed project will adhere to standard LDOTD best management practices and applicable LDEQ permit provisions to prevent erosion and nonpoint source pollution that may result from construction-related activities

4.5.3 Floodplains

Required drainage structures will be designed, installed, and maintained to ensure an appropriate flow of water through the project area.

4.5.4 Noise

The *LDOTD Highway Traffic Noise Policy* (2011) requires that if a noise impact is identified, abatement measures must be considered. Only noise abatement measures deemed reasonable and feasible would be proposed for the project. The future Build scenario will result in 32 impacted receivers; however, noise barriers were not considered feasible since there would need to be several gaps in the barrier to allow for driveway entrances onto Juban Road. These gaps would render the barrier ineffective for reducing noise impacts. One of the most effective noise abatement measures is local land use planning implemented by effective zoning controls to minimize future impacts. Local officials and property owners can make appropriate land use decisions that would avoid or reduce noise impacts to future development.

4.5.5 Potential Waste Sites

Any further investigation of the sites identified in Section 4.1.20 will be handled in accordance with the Secretary's Policy and Procedure Memorandum No. 48: Underground Storage Tank and Contaminated Site Policy.

4.5.6 Traffic Disruptions

A construction sequencing plan will be developed and followed to minimize the traffic disruptions during construction. Congestion would be expected to increase temporarily during this period, but the sequencing plan would ensure that traffic continues to flow.

4.5.7 Construction Impacts

Short-term construction impacts (e.g., noise, air quality) will be mitigated through adherence to applicable local, state, and federal regulations, including (but limited to) Section 107.14 (Environmental Protection) of the *Louisiana Standard Specifications for Roads and Bridges* and appropriate LDEQ Air Quality Regulations governing fugitive emissions of particulate matter during road construction activities (LAC 33:III.1305). Standard specification 107.27 (Archaeological and Historical Findings) dictates procedures necessary in the event archeological or historical material is discovered during the course of construction-related activities.

5. Public Comments and Agency Coordination

5.1 How Was the Public Involved in the Environmental Assessment Process?

Early in the planning stage, Solicitation of Views (SOV) data were sent to all appropriate federal, state, and local agencies and officials on January 17, 2013 in order to identify possible adverse social, economic, or environmental effects of the proposed highway location and/or design. Copies of the SOV letter, description, map, mailing list, and all responses are included in Appendix F.

5.2 Open House Public Meeting

An Open House Public Meeting for the project was held on April 30, 2013 from 4:00 p.m. to 7:00 p.m. at Eastside Elementary School in Denham Springs, Louisiana. On April 11, 2013, notices of the Open House Public Meeting were distributed to all appropriate federal, state, and local agencies and officials. In addition, the meeting notice was published in the *Livingston Parish News* on April 18 and April 28, 2013. The notice was also posted on the LDOTD website and provided to local television/radio broadcast outlets.

The Open House Public Meeting provided an opportunity to view the proposed project information, ask questions of the project team, and provide written and verbal comments for consideration. Staff set up informational stations in the school's cafeteria, while a multi-media PowerPoint presentation was set up in the adjoining gymnasium. A tape recorder was available during the course of the meeting to record any verbal comments. During this time, 38 members of the public attended the Public Meeting. All attendees had the opportunity to review the handout, view the PowerPoint presentation, and ask questions of LDOTD staff pertaining to the proposed project. One verbal comment was recorded and seven written comments were received. These comments and the LDOTD responses are summarized in Table 5.2. Four elected officials (or their representatives) and three representatives of other public agencies attended. In addition, six representatives of the media attended. Three cameramen for local television outlets reviewed and filmed the material and two local newspaper reporters photographed the various exhibits.

The handout and PowerPoint presentation specified that written comments would be accepted until May 10, 2013. The transcript, detailing the materials presented and available during the Public Meeting, was distributed to local and state elected officials, state and local public libraries, and LDOTD District offices.

Table 5.1 Public Meeting Comments and Responses

Comment	Response
Concerned about the possible increase in the number of traffic accidents through the proposed roundabouts; concerned slow-moving traffic through roundabouts will cause increased congestion.	Roundabouts have been shown to create fewer conflict points than a four-way intersection, thereby reducing fatalities and injury crashes. A roundabout redirects some of the conflicting traffic movements, such as left turns, which cause crashes at traditional intersections. Roundabouts are designed to improve efficiency for motorists. Greater efficiency is achieved by slower speeds and the elimination of more severe crashes, and facility operation is improved by smooth-flowing traffic with less stop-and-go than a signalized intersection.
Concerned that planned future commercial development plans will not be able to occur due to development of the proposed project.	The preferred Build Alternative was developed to minimize impacts and to minimize the number of residential and business relocations as much as practicable while still achieving the need and purpose of the proposed project and meeting the requirements of LDOTD design criteria.
Concerned with the number of possible business relocations on US 190 east of the Juban Road intersection; favors shifting required ROW more to the north along US 190 to reduce the number of possible relocations; concerned with access to the roadway for the residence located at the southeast corner of Juban Road and US 190 due to the location of the roundabout.	Since this project does not propose to shift the alignment of US 190 as a whole, current design criteria dictate the geometric curve data for US 190 entering into a roundabout intersection. In addition, shifting US 190 to the north would impact other properties such as an apartment complex and a retirement home facility. The preferred Build Alternative was developed to minimize impacts and to minimize the number of residential and business relocations as much as practicable while still achieving the need and purpose of the proposed project and meeting the requirements of LDOTD design criteria. The house located at the southeast corner of Juban Road and US 190 has been moved and this property is now a vacant lot; the proposed access driveway for this property is located outside of the roundabout.
Supports the idea that the proposed roundabouts will improve traffic flow and prevent vehicular wrecks.	Comment noted.
Supports the idea of installing additional service roads on the first roundabout similar to the ones proposed on the second roundabout.	At this time, there are no driveways at this location to serve. In the future, another driveway is planned at that location for the Juban Crossing Development, which will be installed by the developer.
Supports the construction of a continuous turn lane (five lane facility); concerned that a raised median will stop commercial development; concerned that large vehicles will not be able to navigate through the roundabouts; opposes multi-use paths and roundabout construction; concerned roundabouts will not be able to carry projected future capacity; concerned that roundabouts are not a good fit for the community; questions why roundabouts were not installed at other recent projects in the area.	Because it is the policy of LDOTD that all multi-lane roadways, independent of their roadway classification, will be designed with a median, the roadway configuration of four lanes with a continuous center median was discarded. New frontage roads, which would be constructed parallel to Juban Road east and west of the second roundabout, are proposed. The frontage roads would enhance access to existing properties. All three roundabouts are designed to accommodate a tractor-trailer with a maximum wheelbase (WB) of 67 feet and provide the necessary turn radius to allow vehicles to travel through the roundabout. LDOTD has adopted a Complete Streets Policy whereby bicycle accommodations appropriate to the context of the roadway will be provided on all new and reconstruction roadway projects. LDOTD's Complete Streets Policy is proposed to be implemented through the construction of a shared-use bicycle/pedestrian path. Exceptions for not accommodating bicyclists, pedestrians, and transit users in accordance with this policy will require approval of the LDOTD Chief Engineer. See Section 2.2.4 Comments noted.
Unsure as to whether the roundabouts will aid traffic flow, but believes they will reduce traffic accidents.	Comment noted.

Comment	Response
Concerned about reduction in emergency vehicle response times due to traveling through a roundabout; concerned proposed project will prohibit commercial growth; suggests design changes to proposed project to include roundabout bypass lanes; concerned about loss of two driveway access locations onto Juban Road.	A well-designed roundabout can improve the operation of roadways and intersections by allowing for smooth-flowing traffic with less stop-and-go, thereby possibly reducing travel times. Roundabouts are designed to accommodate vehicles with a large turning radius such as buses, fire trucks, and eighteen-wheelers. Left turns would be routed through roundabouts, which would change the way some businesses are accessed. The addition of two lanes would improve traffic flow and would be expected to offset any impacts from the left turn limitations. The properties that directly front US 190 are predominantly commercial and the proposed improvements to the roadway are expected to enhance community access and utilization of these commercial resources. It is anticipated that growth along Juban Road will increase the demand for additional highway capacity. Improvements to the corridor would improve the ability of commercial vehicles to move along the corridor more efficiently. Such efficiency is often an important economic factor for local industries. The preferred Build Alternative was developed to achieve the purpose and need of the proposed project and meeting the requirements of LDOTD design criteria. This design also offers the best solution to the capacity requirements for the area. LDOTD has adopted an Access Management Policy for the construction of new roadways which controls access connections on a roadway. In keeping with the Policy, redundant driveways along the entire project length of Juban Road are proposed to be eliminated (Appendix E). Comments noted.

6. Comparison of the Build and No-Build Alternative

A comparison of quantifiable project impacts provided in Table 6.1 offers a basis for discussion and selection of the preferred Build Alternative.

Table 6.1 Comparison of Impacts by Alternative

Evaluation Measure	Units	No-Build	Build
Relocation Impacts			
Residential Relocations	Each	0	25
Commercial Relocations	Each	0	5
Community Relocations	Each	0	0
Vacant/Unused Structures	Each	0	0
Other Relocations	Each	0	0
Frontage Impacts			
Residential Properties	Each	0	75
Commercial Properties	Each	0	15
Community Properties	Each	0	0
Potential Environmental Risk Sites			
Underground Storage Tanks with Known Owner	Each	0	0
HREC with Known Owner	Each	0	0
Inactive without Known Owner	Each	0	0
Oil and Gas Wells	Each	0	0
Natural Environment			
Wetlands	Acres	0	8.665
Other Waters of the U.S.	Acres	0	0.113
Scenic Streams	Each	0	0
Stream Crossings	Each	0	0
Sole Source Aquifer Impacts	Acres	0	0
Protected Species	Each	0	0
Prime and Unique Farmland	Acres	0	0
Coastal Resources and Essential Fish Habitat	Each	N/A	N/A
Cultural Resources			
Properties Eligible for or Listed on NRHP	Each	0	0
Properties Not Eligible for NRHP	Each	0	0
Section 6(f) Properties	Each	0	0
Noise			
Receptors Impacted in 2034	Each	34	32

HREC Historical Recognized Environmental Condition
NA Not Applicable
NRHP National Register of Historic Places
TBD To Be Determined

An opinion of estimated costs was compiled for the preferred Build Alternative and the values are detailed in Table 6.2. The estimates include construction costs, ROW acquisition and relocation costs, and utility relocation costs. The proposed project is being funded with state bond money and federal safety dollars. Federal safety dollars would be used for the roundabout to be located at the US 190 / Juban Road intersection, while state bond money would be used for the remainder of the proposed project.

Table 6.2 Estimated Costs of Preferred Build Alternative

Cost	Preferred Build Alternative
Construction	$ 12,328,320
Right-of-Way and Relocation	$ 7,021,680
Utility Relocation	$ 2,650,000
Total	**$22,000,000**

THIS PAGE INTENTIONALLY LEFT BLANK

Appendix **A**

Exhibits

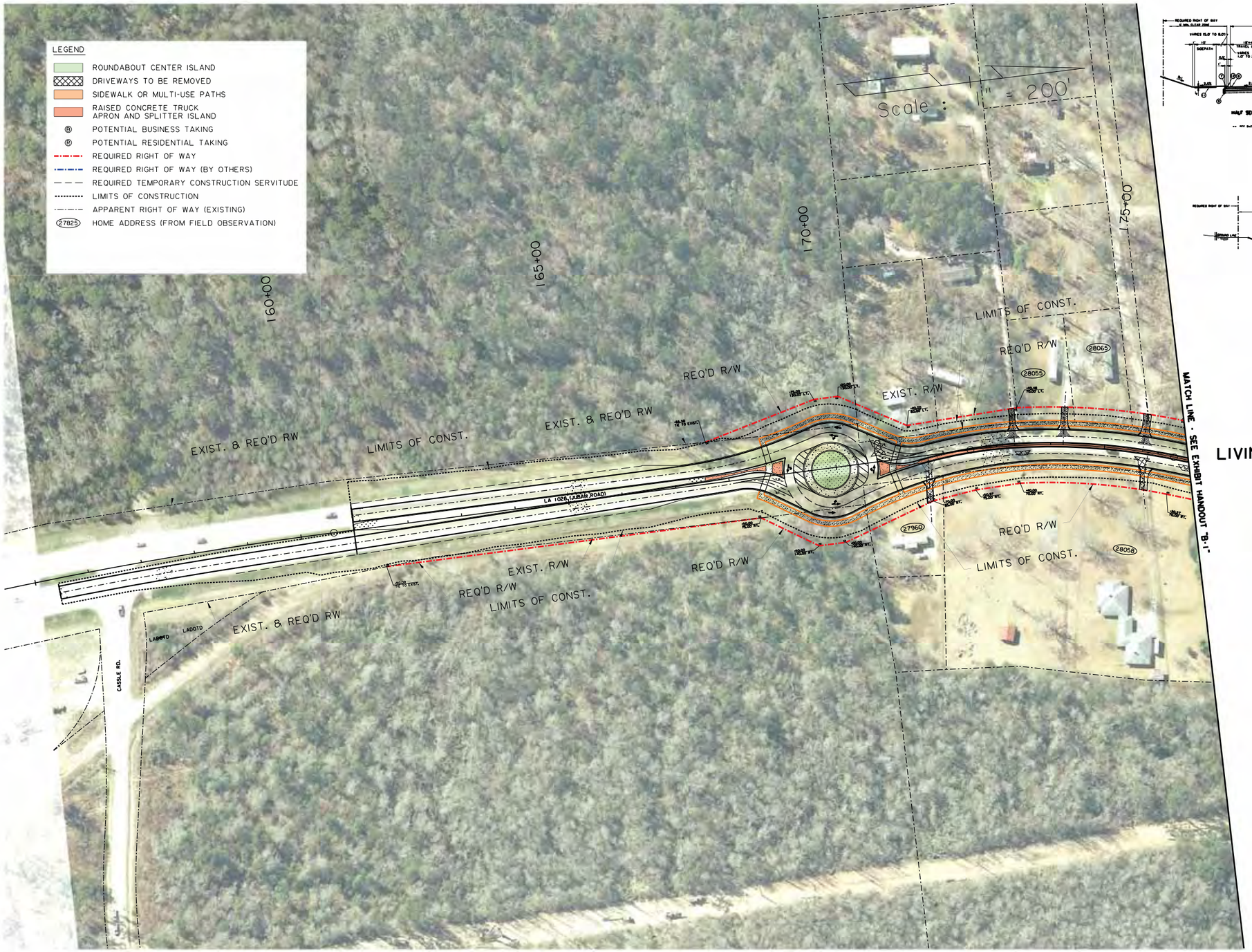

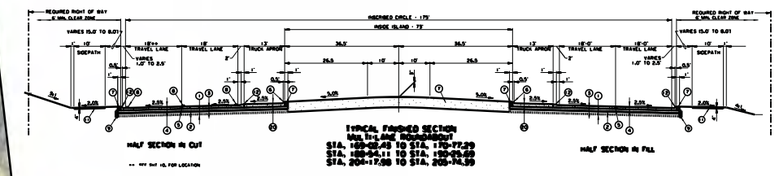

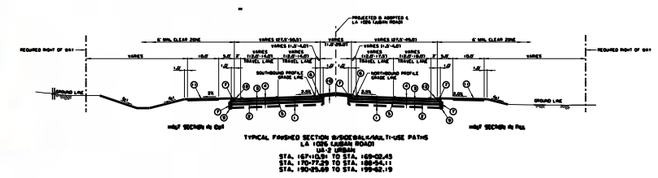

EXHIBIT "A"
JUBAN ROAD (LA 1026) WIDENING
(I-12 TO US 190)
LIVINGSTON PARISH/STATE PROJECT NO. H.004634.5
LIVINGSTON PARISH, LOUISIANA

DOTD
LOUISIANA DEPARTMENT OF TRANSPORTATION & DEVELOPMENT

U.S. Department of Transportation
Federal Highway Administration

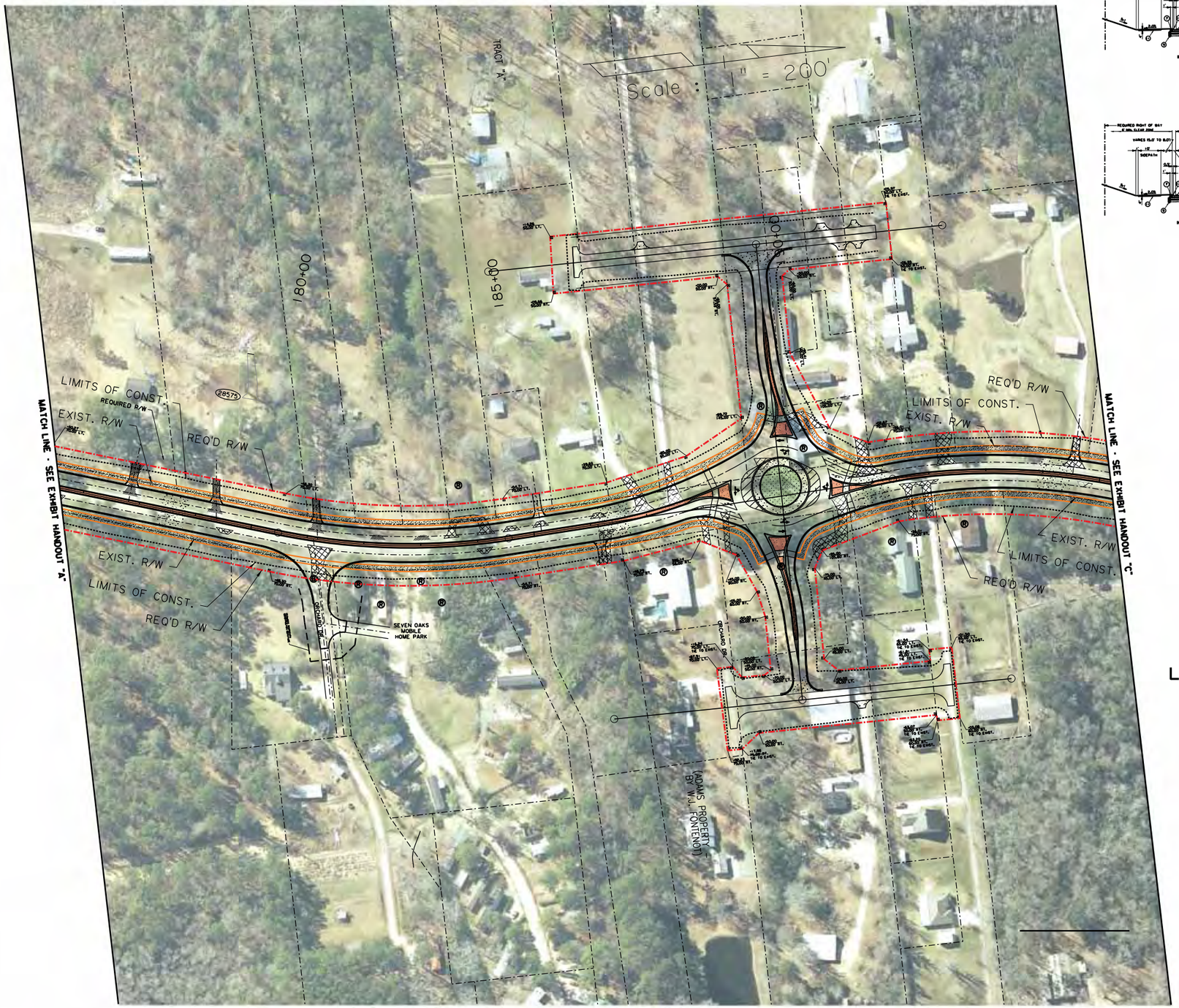

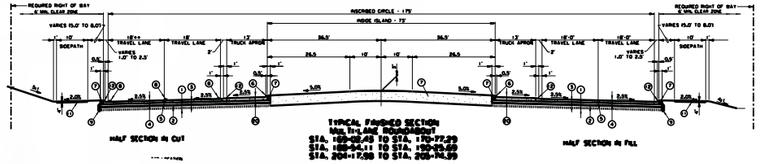

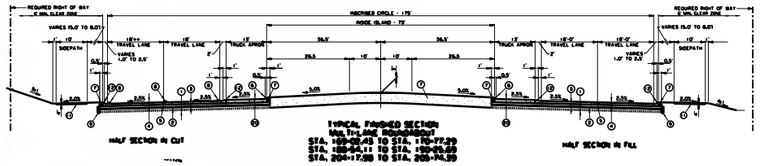

LEGEND

- ROUNDABOUT CENTER ISLAND
- DRIVEWAYS TO BE REMOVED
- SIDEWALK OR MULTI-USE PATHS
- RAISED CONCRETE TRUCK APRON AND SPLITTER ISLAND
- Ⓑ POTENTIAL BUSINESS TAKING
- Ⓡ POTENTIAL RESIDENTIAL TAKING
- REQUIRED RIGHT OF WAY
- REQUIRED RIGHT OF WAY (BY OTHERS)
- REQUIRED TEMPORARY CONSTRUCTION SERVITUDE
- LIMITS OF CONSTRUCTION
- APPARENT RIGHT OF WAY (EXISTING)
- (27825) HOME ADDRESS (FROM FIELD OBSERVATION)

EXHIBIT "B"
JUBAN ROAD (LA 1026) WIDENING
(I-12 TO US 190)
LIVINGSTON PARISH/STATE PROJECT NO. H.004634.5
LIVINGSTON PARISH, LOUISIANA

DOTD
LOUISIANA DEPARTMENT OF TRANSPORTATION & DEVELOPMENT

U.S. Department of Transportation
Federal Highway Administration

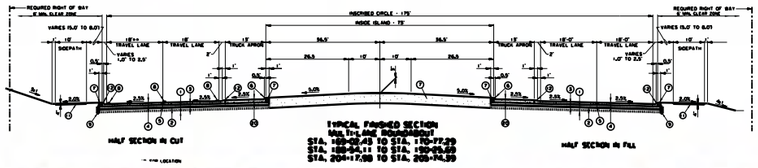

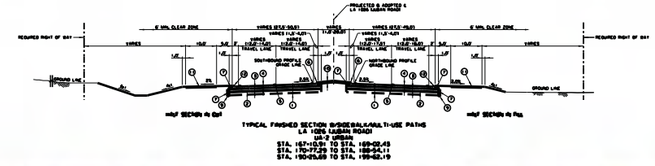

LEGEND

- ROUNDABOUT CENTER ISLAND
- DRIVEWAYS TO BE REMOVED
- SIDEWALK OR MULTI-USE PATHS
- RAISED CONCRETE TRUCK APRON AND SPLITTER ISLAND
- Ⓑ POTENTIAL BUSINESS TAKING
- Ⓡ POTENTIAL RESIDENTIAL TAKING
- REQUIRED RIGHT OF WAY
- REQUIRED RIGHT OF WAY (BY OTHERS)
- REQUIRED TEMPORARY CONSTRUCTION SERVITUDE
- LIMITS OF CONSTRUCTION
- APPARENT RIGHT OF WAY (EXISTING)
- (27825) HOME ADDRESS (FROM FIELD OBSERVATION)

Scale: 1" = 200'

LOT C OF THE ALLEN DIXON ESTATE (MAP BY L.L. HIGGINBOTHAM)

EAST 100' OF THE SAMUEL DIXON ESTATE

JUBAN COURT CONDOMINIUMS

DIXON MEDICAL OFFICES

DELTA PROCESS EQUIPMENT

ACCURATE COMPONENTS INC.

PENTAIR WATER

WAYNE LANDRY LANE

U.S. 190 (FLORIDA BLVD.)

JUBAN EXPRESS GAS STATION AND CONVENIENT STORE

CYPRESS GATES APARTMENTS

LE MAISON LEISURE LIVING, INC.

BARNETTE ROAD

SILK SCREENS CUSTOM PRINTED APPAREL

SHINDAIWA

SCHOOL DAYS UNIFORM

BICKFORD LANE

REQ'D R/W

LIMITS OF CONST.

EXIST. R/W

10+00

15+00

20+00

25+00

30+00

35+00

195+00

200+00

205+00

MATCH LINE - SEE EXHIBIT HANDOUT "B-1"

EXHIBIT "C"
JUBAN ROAD (LA 1026) WIDENING
(I-12 TO US 190)
LIVINGSTON PARISH/STATE PROJECT NO. H.004634.5
LIVINGSTON PARISH, LOUISIANA

DOTD LOUISIANA DEPARTMENT OF TRANSPORTATION & DEVELOPMENT

U.S. Department of Transportation Federal Highway Administration

Appendix **B**

Typical Cross Sections

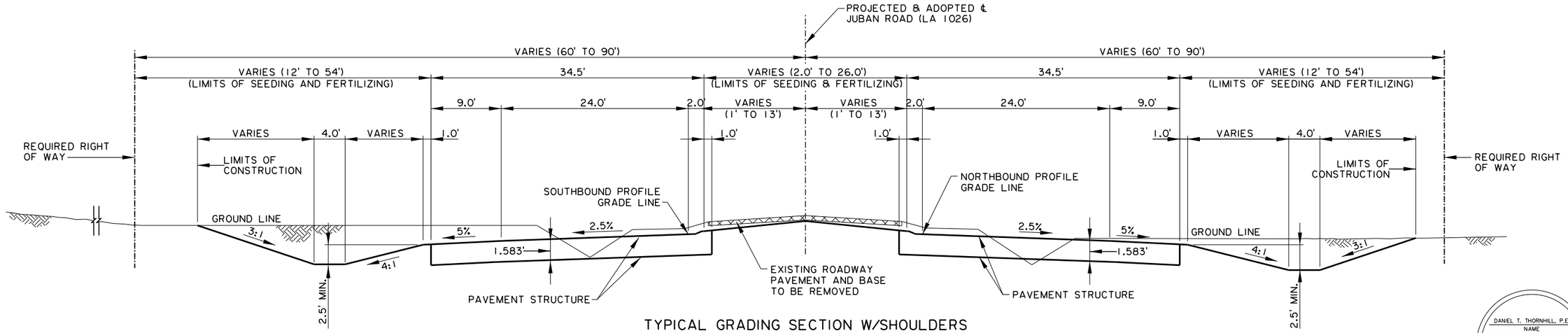

TYPICAL GRADING SECTION W/SHOULDERS
JUBAN ROAD (LA 1026)
UA-2 URBAN
STA. 155+41.33 TO STA. 160+98.60 (NORTHBOUND ONLY)*
STA. 160+98.60 TO STA. 167+10.91

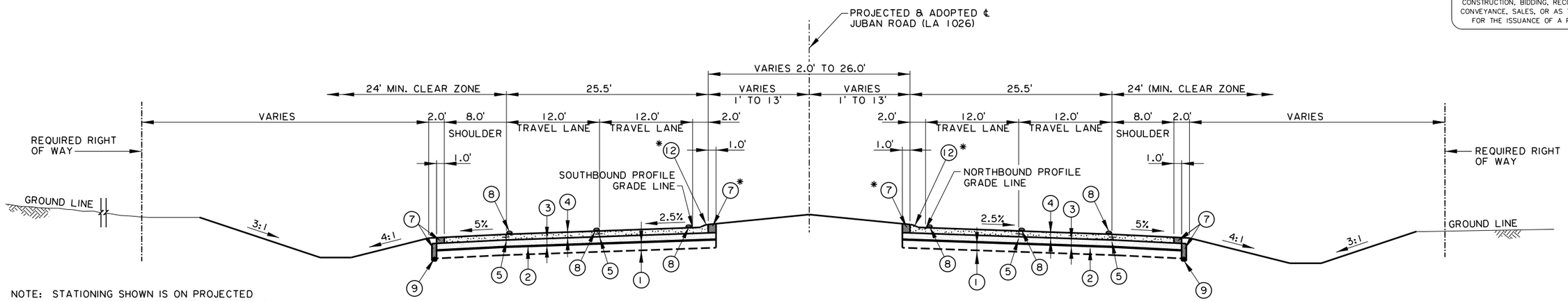

NOTE: STATIONING SHOWN IS ON PROJECTED AND ADOPTED CENTERLINE JUBAN ROAD (LA 1026).

TYPICAL FINISHED SECTION W/SHOULDERS
JUBAN ROAD (LA 1026)
UA-2 URBAN
STA. 155+41.33 TO STA. 160+98.60 (NORTHBOUND ONLY)*
STA. 160+98.60 TO STA. 167+10.91

LEGEND

ITEM NO.	DESCRIPTION
1	12.0" TYPE E LIME TREATMENT (9% BY VOLUME) (AS DIRECTED BY THE PROJECT ENGINEER)
2	GEOTEXTILE FABRIC
3	CLASS II BASE COURSE 10" THICK (CRUSHED STONE OR RECYCLED PCCP, OR CALCIUM SULFATE) OR (6" SOIL CEMENT AND 4" CRUSHED STONE OR RECYCLED PCCP)
4	9" PORTLAND CEMENT CONCRETE PAVEMENT
5	LONGITUDINAL JOINT OR LONGITUDINAL CONSTRUCTION JOINT
7	EMBANKMENT
8	RAISED PAVEMENT MARKERS AND/OR PLASTIC PAVEMENT STRIPING. SEE STANDARD PLAN PM-01.
9	4" PERFORATED PIPE UNDERDRAIN
12	INTEGRAL CONCRETE CURB (4" MOUNTABLE)
13	5" SUPERPAVE ASPHALTIC CONCRETE BASE COURSE (LEVEL 1)
14	2" SUPERPAVE ASPHALTIC CONCRETE BINDER COURSE (LEVEL 2)
15	2" SUPERPAVE ASPHALTIC CONCRETE WEARING COURSE (LEVEL 2F)
18	COMBINATION CURB AND GUTTER (MOUNTABLE)

* NOTE:
NO CURB OR EMBANKMENT THRU THIS REACH.

RIGID STRUCTURAL DESIGN	
DESIGN ADT	= 19,284
PERFORMANCE PERIOD (YEARS)	= 20
18-KIP ESALS	= 4,199,749
PCC MODULUS OF RUPTURE (PSI)	= 600
K VALUE (PSI/IN)	= 500
CALCULATED THICKNESS (INCHES)	= 8.13
THICKNESS PROVIDED	= 9.0

FLEXIBLE STRUCTURAL DESIGN	
DESIGN ADT	= 19,284
PERFORMANCE PERIOD (YEARS)	= 20
18-KIP ESALS	= 3,378,622
SOIL RESILIENT MODULUS (PSI)	= 9,549
STRUCTURAL NUMBER REQUIRED (INCHES)	= 4.25
STRUCTURAL NUMBER PROVIDED (INCHES)	= 4.51

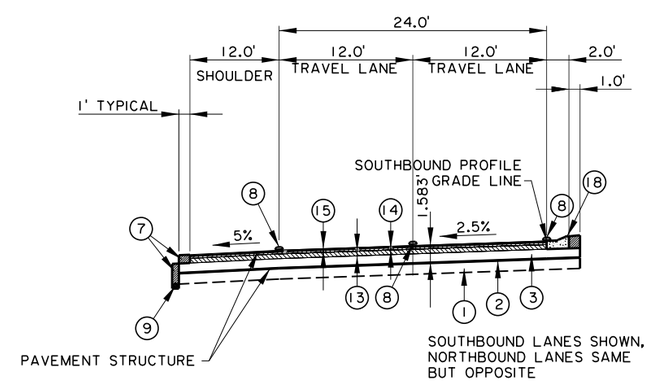

TYPICAL ALTERNATE FINISHED SECTION
JUBAN ROAD (LA 1026)
UA-2 URBAN

DANIEL T. THORNHILL, P.E.
NAME
PRELIMINARY
MARCH 10, 2015
DATE
32367
LICENSE No.

THIS DOCUMENT IS NOT TO BE USED FOR CONSTRUCTION, BIDDING, RECORDATION, CONVEYANCE, SALES, OR AS THE BASIS FOR THE ISSUANCE OF A PERMIT.

SHEET NUMBER	2
PARISH	LIVINGSTON
CONTROL SECTION	832-13
STATE PROJECT	H.004634
DESIGNED / CHECKED	DTT / NJF
DETAILED / CHECKED	DFH / DTT
DATE / SHEET	03-10-15

NO.	DATE	REVISION DESCRIPTION	BY

TYPICAL SECTIONS
JUBAN ROAD (LA 1026)
JUBAN ROAD (LA 1026) WIDENING

90% PRELIMINARY PLANS

TYPICAL_SECTIONS_JUBAN_SHT-2_11198.dgn

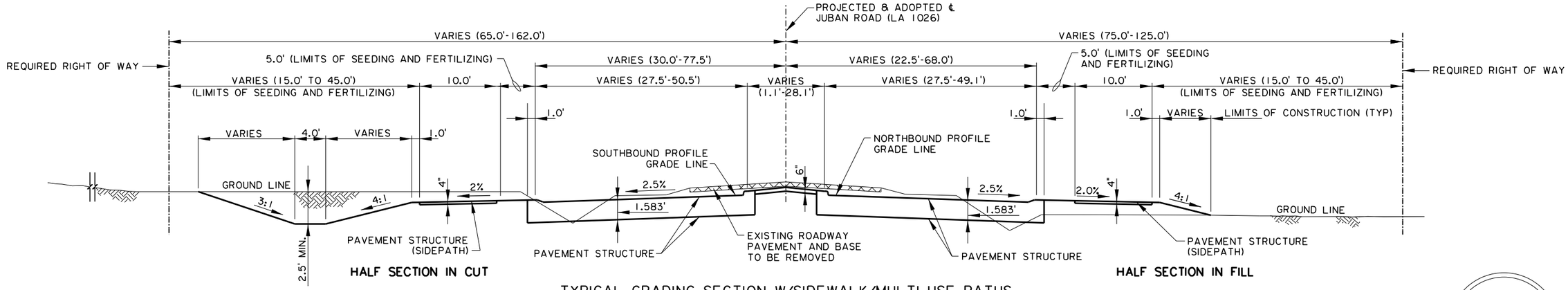

TYPICAL GRADING SECTION W/SIDEWALK/MULTI-USE PATHS
JUBAN ROAD (LA 1026)
UA-2 URBAN
STA. 167+10.91 TO STA. 169+02.43
STA. 170+77.29 TO STA. 188+54.11
STA. 190+25.69 TO STA. 199+62.19

NOTE: STATIONING SHOWN IS ON PROJECTED AND ADOPTED CENTERLINE LA 1026 (JUBAN ROAD).

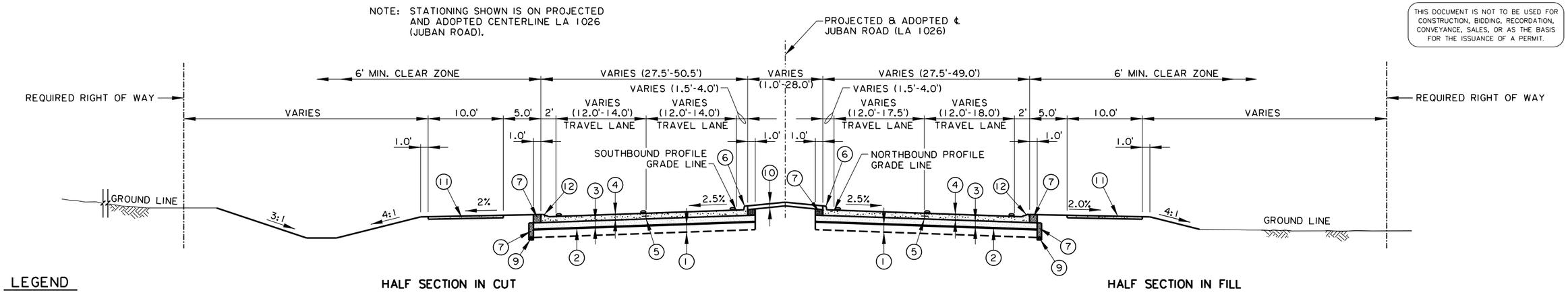

TYPICAL FINISHED SECTION W/SIDEWALK/MULTI-USE PATHS
JUBAN ROAD (LA 1026)
UA-2 URBAN
STA. 167+10.91 TO STA. 169+02.43
STA. 170+77.29 TO STA. 188+54.11
STA. 190+25.69 TO STA. 199+62.19

LEGEND

ITEM NO.	DESCRIPTION
1	12.0" TYPE E LIME TREATMENT (9% BY VOLUME) (AS DIRECTED BY THE PROJECT ENGINEER)
2	GEOTEXTILE FABRIC
3	CLASS II BASE COURSE 10" THICK (CRUSHED STONE OR RECYCLED PCCP, OR CALCIUM SULFATE) OR (6" SOIL CEMENT AND 4" CRUSHED STONE OR RECYCLED PCCP)
4	9" PORTLAND CEMENT CONCRETE PAVEMENT
5	LONGITUDINAL JOINT OR LONGITUDINAL CONSTRUCTION JOINT
6	INTEGRAL CONCRETE CURB (6" BARRIER)
7	EMBANKMENT MATERIAL (APPLIES TO FILL SECTIONS)
8	RAISED PAVEMENT MARKERS AND/OR PLASTIC PAVEMENT STRIPING. SEE STANDARD PLAN PM-01.
9	4" PERFORATED PIPE UNDERDRAIN
10	6" INCIDENTAL CONCRETE PAVEMENT
11	4" INCIDENTAL CONCRETE (SIDEPATH)
12	INTEGRAL CONCRETE CURB (4" MOUNTABLE)
13	5" SUPERPAVE ASPHALTIC CONCRETE BASE COURSE (LEVEL 1)
14	2" SUPERPAVE ASPHALTIC CONCRETE BINDER COURSE (LEVEL 2)
15	2" SUPERPAVE ASPHALTIC CONCRETE WEARING COURSE (LEVEL 2F)
16	COMBINATION CURB AND GUTTER (BARRIER)
17	EXISTING A.C. SURFACE TO BE MILLED (2" AVERAGE DEPTH)
18	COMBINATION CURB AND GUTTER (MOUNTABLE)

RIGID STRUCTURAL DESIGN	
DESIGN ADT	= 19,284
PERFORMANCE PERIOD (YEARS)	= 20
18-KIP ESALS	= 4,199,749
PCC MODULUS OF RUPTURE (PSI)	= 600
K VALUE (PSI/IN)	= 500
CALCULATED THICKNESS (INCHES)	= 8.13
THICKNESS PROVIDED	= 9.0

FLEXIBLE STRUCTURAL DESIGN	
DESIGN ADT	= 19,284
PERFORMANCE PERIOD (YEARS)	= 20
18-KIP ESALS	= 3,378,622
SOIL RESILIENT MODULUS (PSI)	= 9,549
STRUCTURAL NUMBER REQUIRED (INCHES)	= 4.25
STRUCTURAL NUMBER PROVIDED (INCHES)	= 4.51

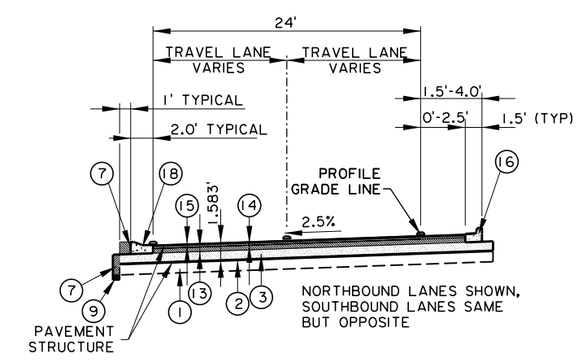

TYPICAL ALTERNATE FINISHED SECTION
JUBAN ROAD (LA 1026)
UA-2 URBAN

DANIEL T. THORNHILL, P.E.
NAME
PRELIMINARY
MARCH 10, 2015
DATE
32367
LICENSE No.

THIS DOCUMENT IS NOT TO BE USED FOR CONSTRUCTION, BIDDING, RECORDATION, CONVEYANCE, SALES, OR AS THE BASIS FOR THE ISSUANCE OF A PERMIT.

90% PRELIMINARY PLANS

TYPICAL_SECTIONS_JUBAN_SHT-2a_11198.dgn

SHEET NUMBER 2a

PARISH	CONTROL SECTION	STATE PROJECT
LIVINGSTON	832-13	H.004634

DESIGNED	CHECKED	DETAILED	CHECKED	DATE	SHEET
DTT	NJF	DFH	DTT	03-10-15	

NO.	DATE	REVISION DESCRIPTION	BY

TYPICAL SECTIONS
JUBAN ROAD (LA 1026)
JUBAN ROAD (LA 1026) WIDENING

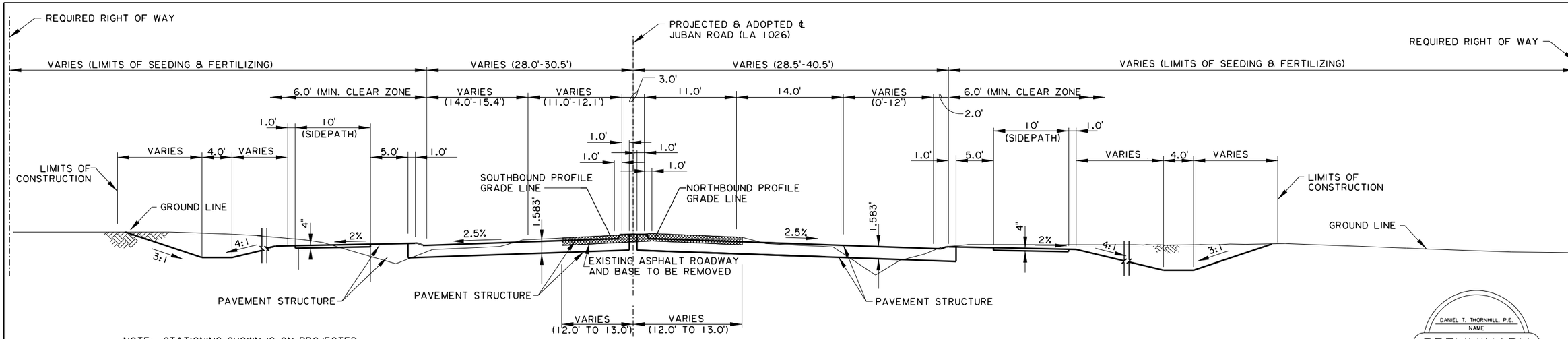

NOTE: STATIONING SHOWN IS ON PROJECTED AND ADOPTED CENTERLINE LA 1026 (JUBAN ROAD).

TYPICAL GRADING SECTION
JUBAN ROAD (LA 1026)
UA-2 URBAN
STA. 199+62.19 TO STA. 202+96.73

DANIEL T. THORNHILL, P.E.
NAME
PRELIMINARY
MARCH 10, 2015
DATE
32367
LICENSE No.

THIS DOCUMENT IS NOT TO BE USED FOR CONSTRUCTION, BIDDING, RECORDATION, CONVEYANCE, SALES, OR AS THE BASIS FOR THE ISSUANCE OF A PERMIT.

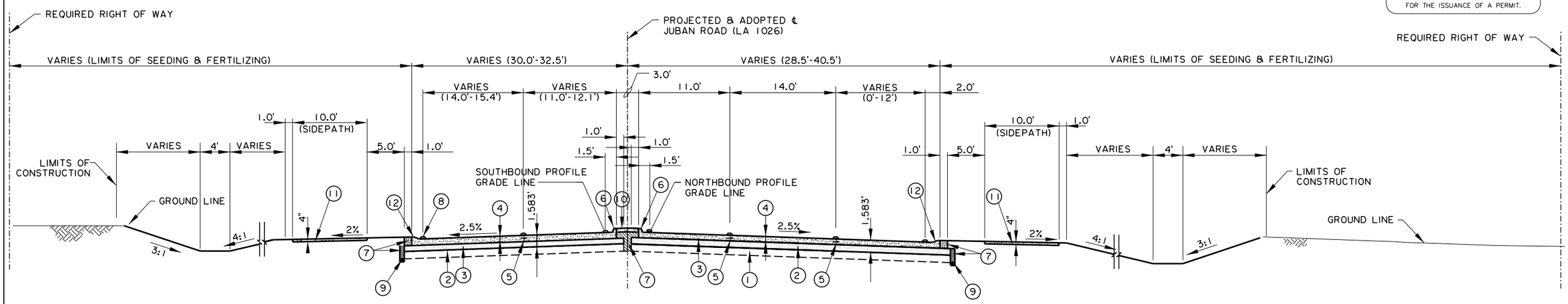

TYPICAL GRADING SECTION
JUBAN ROAD (LA 1026)
UA-2 URBAN
STA. 199+62.19 TO STA. 202+96.73

LEGEND

ITEM NO.	DESCRIPTION
1	12" TYPE E LIME TREATMENT (9% BY VOLUME) (AS DIRECTED BY THE PROJECT ENGINEER)
2	GEOTEXTILE FABRIC
3	CLASS II BASE COURSE 10" THICK (CRUSHED STONE OR RECYCLED PCCP, OR CALCIUM SULFATE) OR (6" SOIL CEMENT AND 4" CRUSHED STONE OR RECYCLED PCCP)
4	9" PORTLAND CEMENT CONCRETE PAVEMENT
5	LONGITUDINAL JOINT OR LONGITUDINAL CONSTRUCTION JOINT
6	INTEGRAL CONCRETE CURB (BARRIER)
7	EMBANKMENT
8	RAISED PAVEMENT MARKERS AND/OR PLASTIC PAVEMENT STRIPING. SEE STANDARD PLAN PM-01.
9	4" PERFORATED PIPE UNDERDRAIN
10	6" INCIDENTAL CONCRETE PAVEMENT
11	4" INCIDENTAL CONCRETE (SIDEPATH)
12	INTEGRAL CONCRETE CURB (4" MOUNTABLE)
13	5" SUPERPAVE ASPHALTIC CONCRETE BASE COURSE (LEVEL 1)
14	2" SUPERPAVE ASPHALTIC CONCRETE BINDER COURSE (LEVEL 2)
15	2" SUPERPAVE ASPHALTIC CONCRETE WEARING COURSE (LEVEL 2F)
16	COMBINATION CURB AND GUTTER (BARRIER)
18	COMBINATION CURB AND GUTTER (MOUNTABLE)

FLEXIBLE STRUCTURAL DESIGN	
DESIGN ADT	= 19,284
PERFORMANCE PERIOD (YEARS)	= 20
18-KIP ESALS	= 3,378,622
SOIL RESILIENT MODULUS (PSI)	= 9,549
STRUCTURAL NUMBER REQUIRED (INCHES)	= 4.25
STRUCTURAL NUMBER PROVIDED (INCHES)	= 4.51

RIGID STRUCTURAL DESIGN	
DESIGN ADT	= 19,284
PERFORMANCE PERIOD (YEARS)	= 20
18-KIP ESALS	= 4,199,749
PCC MODULUS OF RUPTURE (PSI)	= 600
K VALUE	= 500
CALCULATED THICKNESS (INCHES)	= 8.13
THICKNESS PROVIDED (INCHES)	= 9.00

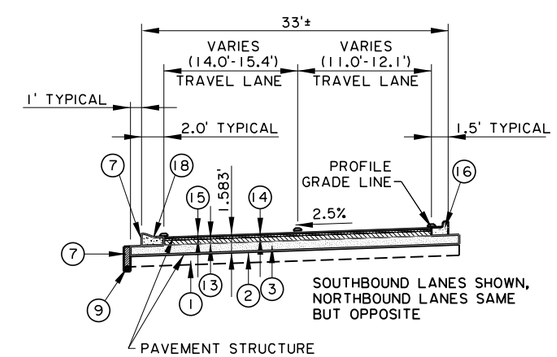

TYPICAL ALTERNATE FINISHED SECTION
JUBAN ROAD (LA 1026)
UA-2 URBAN

90% PRELIMINARY PLANS

TYPICAL_SECTIONS_JUBAN_SHT-2c_11198.dgn

SHEET NUMBER	2b
PARISH	LIVINGSTON
CONTROL SECTION	832-13
STATE PROJECT	H.004634
DESIGNED / CHECKED	DTT / NJF
DETAILED / CHECKED	DFH / DTT
DATE / SHEET	03-10-15

NO.	DATE	REVISION DESCRIPTION	BY

TYPICAL SECTIONS
JUBAN ROAD (LA 1026)

JUBAN ROAD (LA 1026) WIDENING

90% PRELIMINARY PLANS

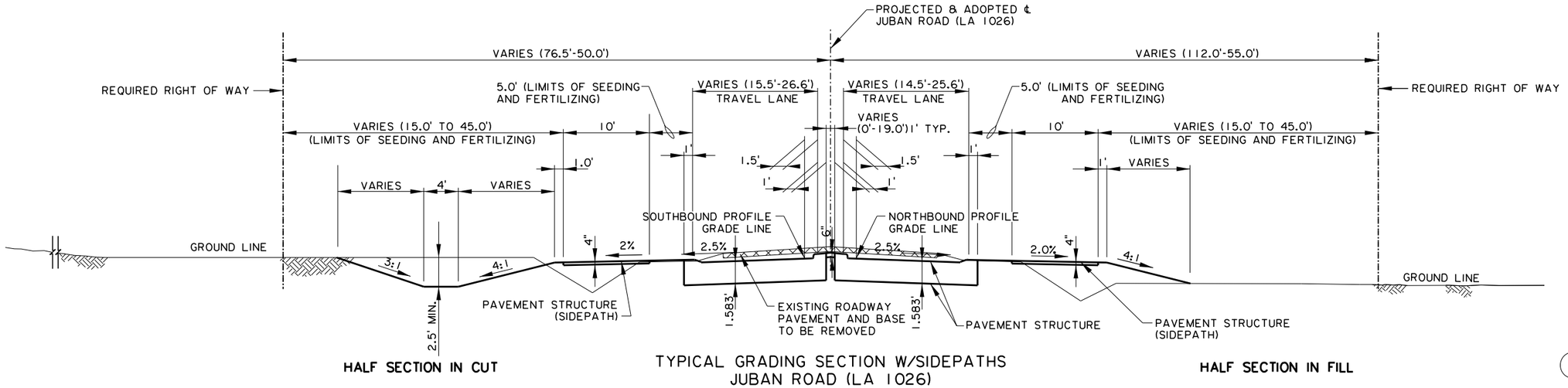

HALF SECTION IN CUT **HALF SECTION IN FILL**

TYPICAL GRADING SECTION W/SIDEPATHS
JUBAN ROAD (LA 1026)
UA-2 URBAN
STA. 205+74.38 TO STA. 208+17.53

NOTE: STATIONING SHOWN IS ON PROJECTED AND ADOPTED CENTERLINE LA 1026 (JUBAN ROAD).

DANIEL T. THORNHILL, P.E.
NAME
PRELIMINARY
JANUARY 30, 2015
DATE
32367
LICENSE No.

THIS DOCUMENT IS NOT TO BE USED FOR CONSTRUCTION, BIDDING, RECORDATION, CONVEYANCE, SALES, OR AS THE BASIS FOR THE ISSUANCE OF A PERMIT.

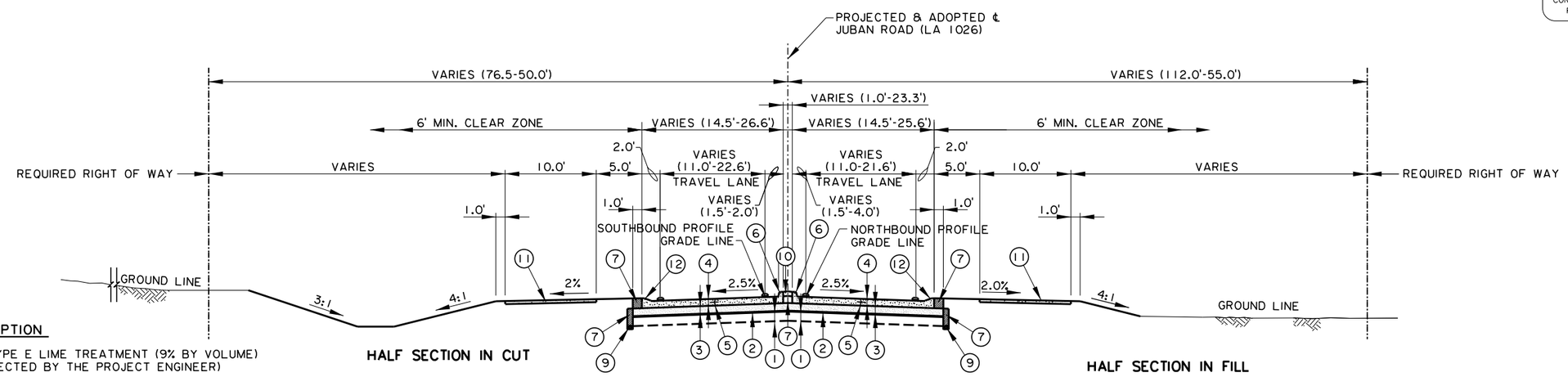

HALF SECTION IN CUT **HALF SECTION IN FILL**

TYPICAL FINISHED SECTION W/SIDEPATHS
JUBAN ROAD (LA 1026)
UA-2 URBAN
STA. 205+74.38 TO STA. 208+17.53

LEGEND

ITEM NO.	DESCRIPTION
1	12.0" TYPE E LIME TREATMENT (9% BY VOLUME) (AS DIRECTED BY THE PROJECT ENGINEER)
2	GEOTEXTILE FABRIC
3	CLASS II BASE COURSE 10" THICK (CRUSHED STONE OR RECYCLED PCCP, OR CALCIUM SULFATE) OR (6" SOIL CEMENT AND 4" CRUSHED STONE OR RECYCLED PCCP)
4	9" PORTLAND CEMENT CONCRETE PAVEMENT
5	LONGITUDINAL JOINT OR LONGITUDINAL CONSTRUCTION JOINT
6	INTEGRAL CONCRETE CURB (6" BARRIER)
7	EMBANKMENT
8	INDICATES RAISED PAVEMENT MARKERS AND/OR PLASTIC PAVEMENT STRIPING. SEE STANDARD PLAN PM-01.
9	4" PERFORATED PIPE UNDERDRAIN
10	6" INCIDENTAL CONCRETE PAVEMENT
11	4" INCIDENTAL CONCRETE (SIDEPATH)
12	INTEGRAL CONCRETE CURB (4" MOUNTABLE)
13	5" SUPERPAVE ASPHALTIC CONCRETE BASE COURSE (LEVEL 1)
14	2" SUPERPAVE ASPHALTIC CONCRETE BINDER COURSE (LEVEL 2)
15	2" SUPERPAVE ASPHALTIC CONCRETE WEARING COURSE (LEVEL 2F)
16	COMBINATION CURB AND GUTTER (BARRIER)
17	EXISTING A.C. SURFACE TO BE MILLED (2" AVERAGE DEPTH)
18	COMBINATION CURB AND GUTTER (MOUNTABLE)

RIGID STRUCTURAL DESIGN	
DESIGN ADT	= 19,284
PERFORMANCE PERIOD (YEARS)	= 20
18-KIP ESALS	= 4,199,749
PCC MODULUS OF RUPTURE (PSI)	= 600
K VALUE (PSI/IN)	= 500
CALCULATED THICKNESS (INCHES)	= 8.13
THICKNESS PROVIDED	= 9.0

FLEXIBLE STRUCTURAL DESIGN	
DESIGN ADT	= 19,284
PERFORMANCE PERIOD (YEARS)	= 20
18-KIP ESALS	= 3,378,622
SOIL RESILIENT MODULUS (PSI)	= 9,549
STRUCTURAL NUMBER REQUIRED (INCHES)	= 4.25
STRUCTURAL NUMBER PROVIDED (INCHES)	= 4.51

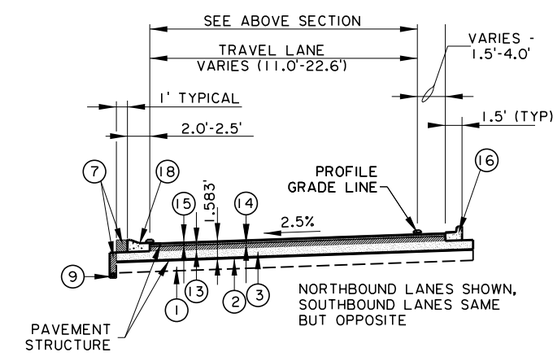

TYPICAL ALTERNATE FINISHED SECTION
JUBAN ROAD (LA 1026)
UA-2 URBAN

*TRAVEL LANE VARIES - SEE ABOVE

SHEET NUMBER	2c
PARISH	LIVINGSTON
CONTROL SECTION	832-13
STATE PROJECT	H.004634
DESIGNED / CHECKED	DTT / NJF
DETAILED / CHECKED	DFH / DTT
DATE / SHEET	03-10-15

NO.	DATE	REVISION DESCRIPTION	BY

TYPICAL SECTIONS
JUBAN ROAD (LA 1026)
JUBAN ROAD (LA 1026) WIDENING

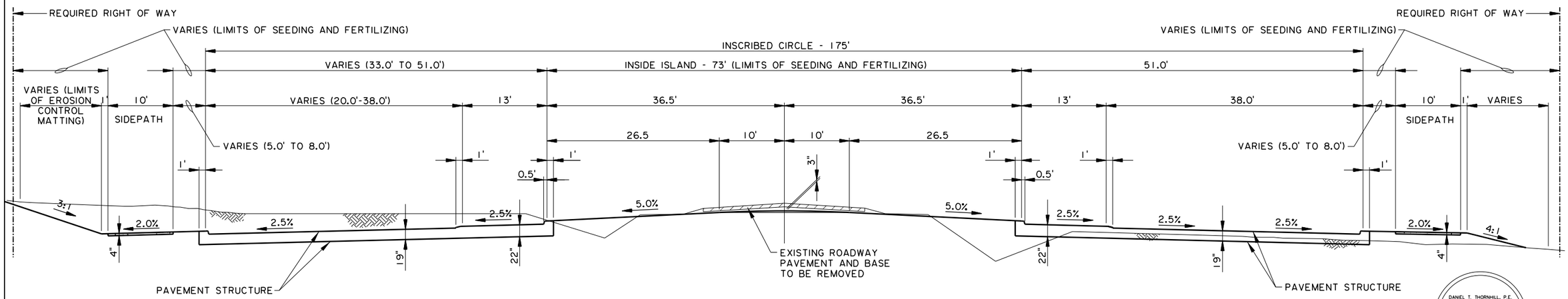

HALF SECTION IN CUT

HALF SECTION IN FILL

TYPICAL GRADING SECTION
MULTI-LANE ROUNDABOUT
STA. 169+02.43 TO STA. 170+77.29
STA. 188+54.11 TO STA. 190+25.69
STA. 204+17.98 TO STA. 205+74.38

NOTES:
1. STATIONING SHOWN IS ON PROJECTED AND ADOPTED CENTERLINE LA 1026 (JUBAN ROAD).
2. SEE JOINT LAYOUT SHEETS FOR ELEVATION. NO PROFILE GRADE LINE PROVIDED.

DANIEL T. THORNHILL, P.E.
NAME
PRELIMINARY
MARCH 10, 2015
DATE
32367
LICENSE No.

THIS DOCUMENT IS NOT TO BE USED FOR CONSTRUCTION, BIDDING, RECORDATION, CONVEYANCE, SALES, OR AS THE BASIS FOR THE ISSUANCE OF A PERMIT.

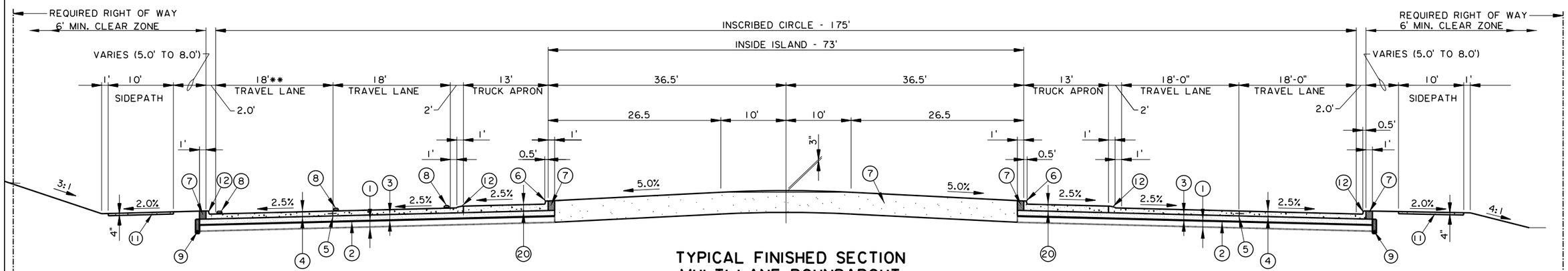

HALF SECTION IN CUT

HALF SECTION IN FILL

TYPICAL FINISHED SECTION
MULTI-LANE ROUNDABOUT
STA. 169+02.43 TO STA. 170+77.29
STA. 188+54.11 TO STA. 190+25.69
STA. 204+17.98 TO STA. 205+74.38

** SEE SHT 10. FOR LOCATION OF REMOVED OUTSIDE LANE

LEGEND

ITEM NO.	DESCRIPTION
1	12.0" TYPE E LIME TREATMENT (9% BY VOLUME) (AS DIRECTED BY THE PROJECT ENGINEER)
2	GEOTEXTILE FABRIC
3	CLASS II BASE COURSE 10" THICK (CRUSHED STONE OR RECYCLED PCCP, OR CALCIUM SULFATE) OR (6" SOIL CEMENT AND 4" CRUSHED STONE OR RECYCLED PCCP)
4	9" PORTLAND CEMENT CONCRETE PAVEMENT
5	LONGITUDINAL JOINT OR LONGITUDINAL CONSTRUCTION JOINT
6	INTEGRAL CONCRETE CURB (BARRIER)
7	EMBANKMENT
8	RAISED PAVEMENT MARKERS AND/OR PLASTIC PAVEMENT STRIPING. SEE STANDARD PLAN PM-01.
9	4" PERFORATED PIPE UNDERDRAIN
10	6" INCIDENTAL CONCRETE PAVEMENT
11	4" INCIDENTAL CONCRETE (SIDEPATH)
12	INTEGRAL CONCRETE CURB (4" MOUNTABLE)
13	5" SUPERPAVE ASPHALTIC CONCRETE BASE COURSE (LEVEL 1)
14	2" SUPERPAVE ASPHALTIC CONCRETE BINDER COURSE (LEVEL 2)
15	2" SUPERPAVE ASPHALTIC CONCRETE WEARING COURSE (LEVEL 2F)
16	COMBINATION CURB AND GUTTER (BARRIER)
18	COMBINATION CURB AND GUTTER (MOUNTABLE)
20	12" PORTLAND CEMENT CONCRETE PAVEMENT

RIGID STRUCTURAL DESIGN	
DESIGN ADT	= 19,284
PERFORMANCE PERIOD (YEARS)	= 20
18-KIP ESALS	= 4,199,749
PCC MODULUS OF RUPTURE (PSI)	= 600
K VALUE (PSI/IN)	= 500
CALCULATED THICKNESS (INCHES)	= 8.13
THICKNESS PROVIDED	= 9.0

FLEXIBLE STRUCTURAL DESIGN	
DESIGN ADT	= 19,284
PERFORMANCE PERIOD (YEARS)	= 20
18-KIP ESALS	= 3,378,622
SOIL RESILIENT MODULUS (PSI)	= 9,549
STRUCTURAL NUMBER REQUIRED (INCHES)	= 4.25
STRUCTURAL NUMBER PROVIDED (INCHES)	= 4.51

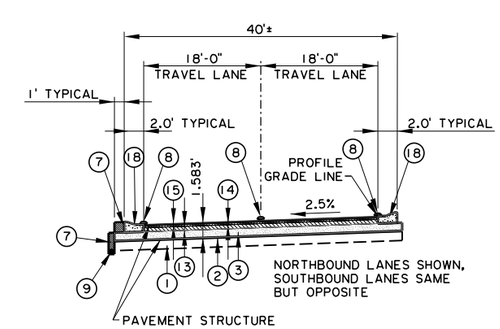

TYPICAL ALTERNATE FINISHED SECTION
LA 1026 (JUBAN ROAD)
UA-2 URBAN

90% PRELIMINARY PLANS

Typicals_ROUNDABOUT_11198.dgn

SHEET NUMBER	2d
PARISH	LIVINGSTON
CONTROL SECTION	832-13
STATE PROJECT	H.004634
DESIGNED / CHECKED	DTT / NJF
DETAILED / CHECKED	DFH / DTT
DATE / SHEET	03-10-15

NO.	DATE	REVISION DESCRIPTION	BY

TYPICAL SECTIONS
MULTI-LANE ROUNDABOUT
JUBAN ROAD (LA 1026) WIDENING

90% PRELIMINARY PLANS

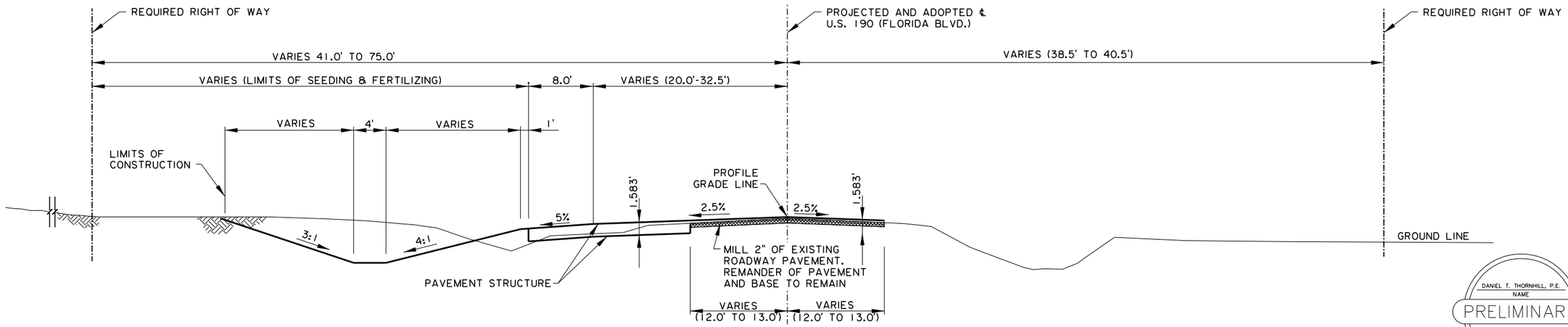

TYPICAL GRADING SECTION
US 190 (FLORIDA BLVD.)
UA-2 URBAN
STA. 7+00.00 TO STA. 16+07.50

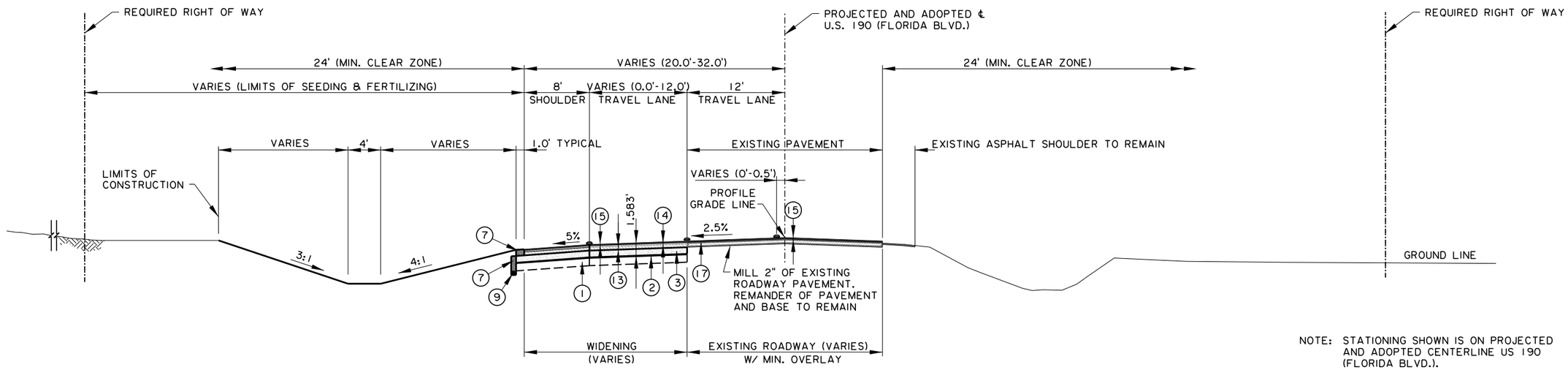

TYPICAL FINISHED SECTION
US 190 (FLORIDA BLVD.)
UA-2 URBAN
STA. 7+00.00 TO STA. 16+07.50

NOTE: STATIONING SHOWN IS ON PROJECTED AND ADOPTED CENTERLINE US 190 (FLORIDA BLVD.).

LEGEND

ITEM NO.	DESCRIPTION
1	12.0" TYPE E LIME TREATMENT (9% BY VOLUME) (AS DIRECTED BY THE PROJECT ENGINEER)
2	GEOTEXTILE FABRIC
3	CLASS II BASE COURSE 10" THICK (CRUSHED STONE OR RECYCLED PCCP, OR CALCIUM SULFATE) OR (6" SOIL CEMENT AND 4" CRUSHED STONE OR RECYCLED PCCP)
7	EMBANKMENT
8	RAISED PAVEMENT MARKERS AND/OR PLASTIC PAVEMENT STRIPING. SEE STANDARD PLAN PM-01.
9	4" PERFORATED PIPE UNDERDRAIN
13	5" SUPERPAVE ASPHALTIC CONCRETE BASE COURSE (LEVEL 1)
14	2" SUPERPAVE ASPHALTIC CONCRETE BINDER COURSE (LEVEL 2)
15	2" SUPERPAVE ASPHALTIC CONCRETE WEARING COURSE (LEVEL 2F)
17	EXISTING A.C. SURFACE TO BE MILLED (2" AVERAGE DEPTH)

FLEXIBLE STRUCTURAL DESIGN	
DESIGN ADT	= 19,284
PERFORMANCE PERIOD (YEARS)	= 20
18-KIP ESALS	= 3,378,622
SOIL RESILIENT MODULUS (PSI)	= 9,549
STRUCTURAL NUMBER REQUIRED (INCHES)	= 4.25
STRUCTURAL NUMBER PROVIDED (INCHES)	= 4.51

THIS DOCUMENT IS NOT TO BE USED FOR CONSTRUCTION, BIDDING, RECORDATION, CONVEYANCE, SALES, OR AS THE BASIS FOR THE ISSUANCE OF A PERMIT.

DANIEL T. THORNHILL, P.E.
NAME
PRELIMINARY
MARCH 10, 2015
DATE
32367
LICENSE No.

SHEET NUMBER 2e

PARISH	CONTROL SECTION	STATE PROJECT
LIVINGSTON	832-13	H.004634

DESIGNED	CHECKED	DETAILED	CHECKED	DATE	SHEET
DTT	NJF	DFH	DTT	03-10-15	

NO.	DATE	REVISION DESCRIPTION	BY

TYPICAL SECTIONS
U.S. 190 (FLORIDA BLVD.)
JUBAN ROAD (LA 1026) WIDENING

90% PRELIMINARY PLANS

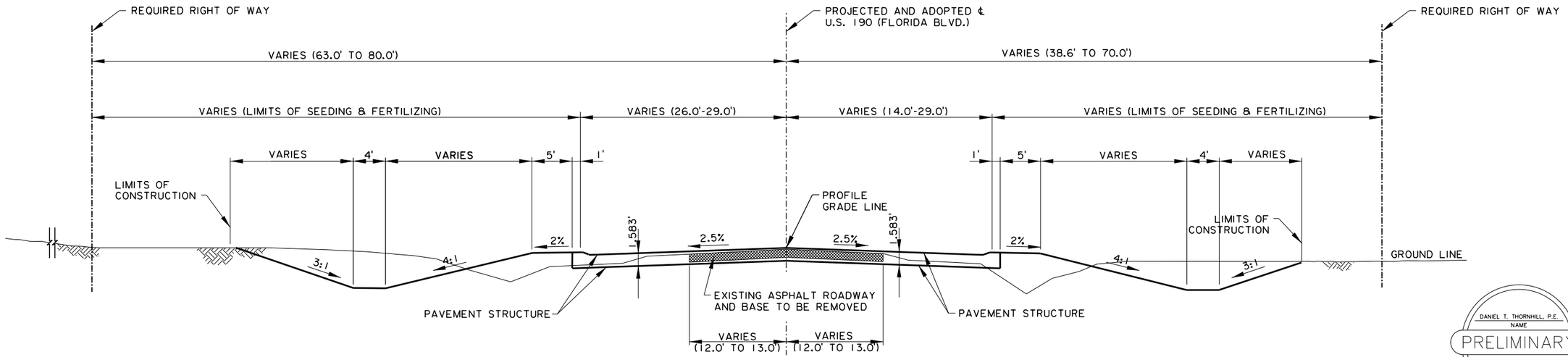

TYPICAL GRADING SECTION
US 190 (FLORIDA BLVD.)
UA-2 URBAN
STA. 16+07.50 TO STA. 17+72.50

DANIEL T. THORNHILL, P.E.
NAME
PRELIMINARY
MARCH 10, 2015
DATE
32367
LICENSE No.

THIS DOCUMENT IS NOT TO BE USED FOR CONSTRUCTION, BIDDING, RECORDATION, CONVEYANCE, SALES, OR AS THE BASIS FOR THE ISSUANCE OF A PERMIT.

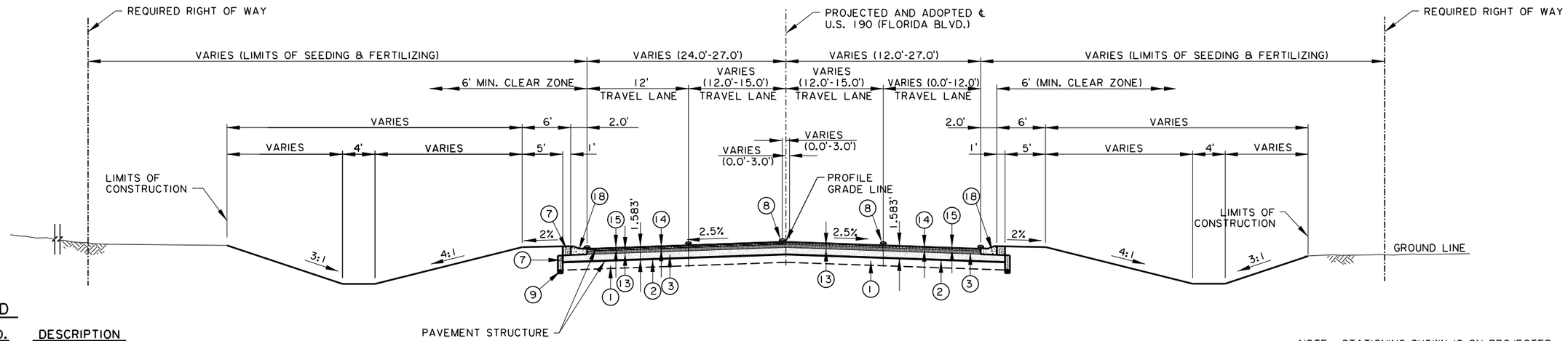

NOTE: STATIONING SHOWN IS ON PROJECTED AND ADOPTED CENTERLINE US 190 (FLORIDA BLVD.).

LEGEND

ITEM NO.	DESCRIPTION
1	12.0" TYPE E LIME TREATMENT (9% BY VOLUME) (AS DIRECTED BY THE PROJECT ENGINEER)
2	GEOTEXTILE FABRIC
3	CLASS II BASE COURSE 10" THICK (CRUSHED STONE OR RECYCLED PCCP, OR CALCIUM SULFATE) OR (6" SOIL CEMENT AND 4" CRUSHED STONE OR RECYCLED PCCP)
7	EMBANKMENT
8	RAISED PAVEMENT MARKERS AND/OR PLASTIC PAVEMENT STRIPING. SEE STANDARD PLAN PM-01.
9	4" PERFORATED PIPE UNDERDRAIN
13	5" SUPERPAVE ASPHALTIC CONCRETE BASE COURSE (LEVEL 1)
14	2" SUPERPAVE ASPHALTIC CONCRETE BINDER COURSE (LEVEL 2)
15	2" SUPERPAVE ASPHALTIC CONCRETE WEARING COURSE (LEVEL 2F)
18	COMBINATION CURB AND GUTTER (MOUNTABLE)

TYPICAL FINISHED SECTION
US 190 (FLORIDA BLVD.)
UA-2 URBAN
STA. 16+07.5 TO STA. 17+72.50

FLEXIBLE STRUCTURAL DESIGN	
DESIGN ADT	= 19,284
PERFORMANCE PERIOD (YEARS)	= 20
18-KIP ESALS	= 3,378,622
SOIL RESILIENT MODULUS (PSI)	= 9,549
STRUCTURAL NUMBER REQUIRED (INCHES)	= 4.25
STRUCTURAL NUMBER PROVIDED (INCHES)	= 4.51

SHEET NUMBER 2f

PARISH	CONTROL SECTION	STATE PROJECT
LIVINGSTON	832-13	H.004634

DESIGNED	CHECKED	DETAILED	CHECKED	DATE	SHEET
DTT	NJF	DFH	DTT	03-10-15	

NO.	DATE	REVISION DESCRIPTION	BY

TYPICAL SECTIONS
U.S. 190 (FLORIDA BLVD.)

JUBAN ROAD (LA 1026) WIDENING

90% PRELIMINARY PLANS

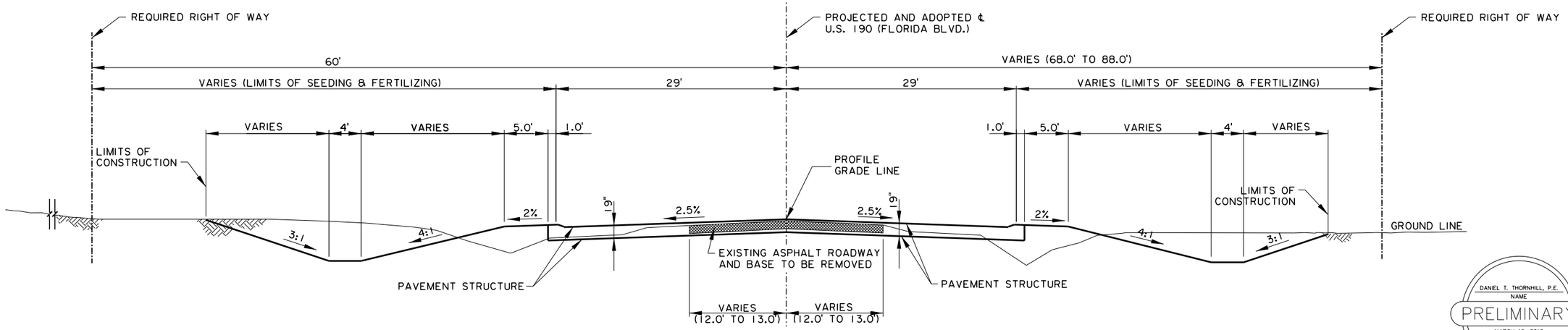

TYPICAL GRADING SECTION
US 190 (FLORIDA BLVD.)
UA-2 URBAN
STA. 17+72.50 TO STA. 20+43.27

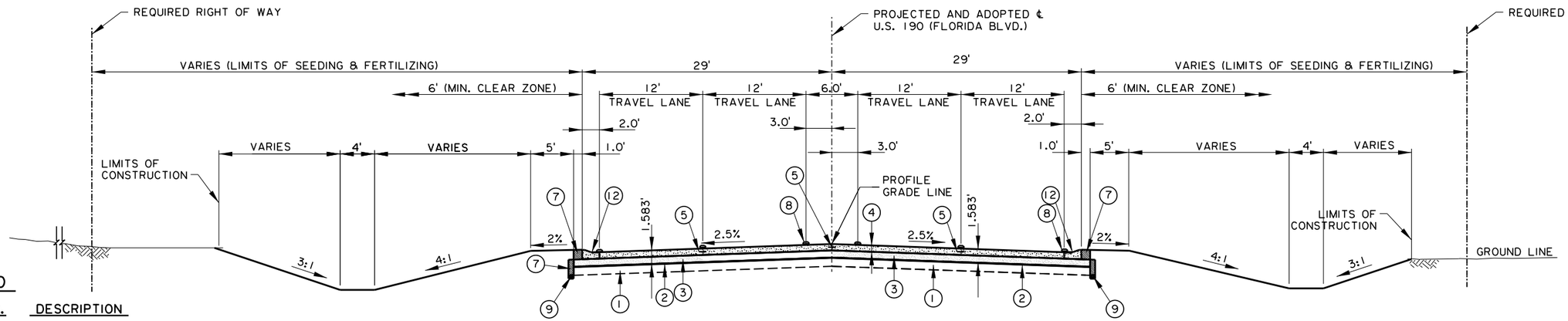

TYPICAL FINISHED SECTION
US 190 (FLORIDA BLVD.)
UA-2 URBAN
STA. 17+72.50 TO STA. 20+43.27

NOTE: STATIONING SHOWN IS ON PROJECTED AND ADOPTED CENTERLINE US 190 (FLORIDA BLVD.).

LEGEND

ITEM NO.	DESCRIPTION
1	12.0" TYPE E LIME TREATMENT (9% BY VOLUME) (AS DIRECTED BY THE PROJECT ENGINEER)
2	GEOTEXTILE FABRIC
3	CLASS II BASE COURSE 10" THICK (CRUSHED STONE OR RECYCLED PCCP, OR CALCIUM SULFATE) OR (6" SOIL CEMENT AND 4" CRUSHED STONE OR RECYCLED PCCP)
4	9" PORTLAND CEMENT CONCRETE PAVEMENT
5	LONGITUDINAL JOINT OR LONGITUDINAL CONSTRUCTION JOINT
7	EMBANKMENT
8	RAISED PAVEMENT MARKERS AND/OR PLASTIC PAVEMENT STRIPING. SEE STANDARD PLAN PM-01.
9	4" PERFORATED PIPE UNDERDRAIN
12	INTEGRAL CONCRETE CURB (4" MOUNTABLE)
13	5" SUPERPAVE ASPHALTIC CONCRETE BASE COURSE (LEVEL 1)
14	2" SUPERPAVE ASPHALTIC CONCRETE BINDER COURSE (LEVEL 2)
15	2" SUPERPAVE ASPHALTIC CONCRETE WEARING COURSE (LEVEL 2F)
16	COMBINATION CURB AND GUTTER (BARRIER)
17	EXISTING A.C. SURFACE TO BE MILLED (2" AVERAGE DEPTH)
18	COMBINATION CURB AND GUTTER (MOUNTABLE)

RIGID STRUCTURAL DESIGN	
DESIGN ADT	= 19,284
PERFORMANCE PERIOD (YEARS)	= 20
18-KIP ESALS	= 4,199,749
PCC MODULUS OF RUPTURE (PSI)	= 600
K VALUE	= 500
CALCULATED THICKNESS (INCHES)	= 8.13
THICKNESS PROVIDED (INCHES)	= 9.00

FLEXIBLE STRUCTURAL DESIGN	
DESIGN ADT	= 19,284
PERFORMANCE PERIOD (YEARS)	= 20
18-KIP ESALS	= 3,378,622
SOIL RESILIENT MODULUS (PSI)	= 9,549
STRUCTURAL NUMBER REQUIRED (INCHES)	= 4.25
STRUCTURAL NUMBER PROVIDED (INCHES)	= 4.51

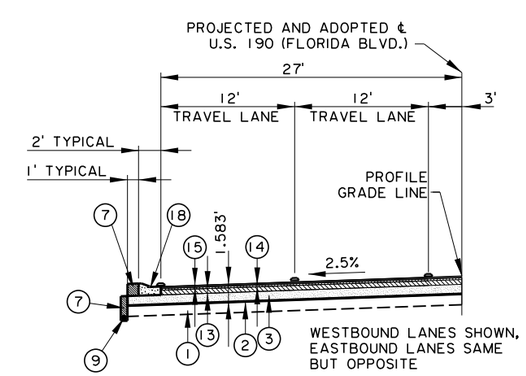

TYPICAL ALTERNATE FINISHED SECTION
US 190 (FLORIDA BLVD.)
UA-2 URBAN

THIS DOCUMENT IS NOT TO BE USED FOR CONSTRUCTION, BIDDING, RECORDATION, CONVEYANCE, SALES, OR AS THE BASIS FOR THE ISSUANCE OF A PERMIT.

DANIEL T. THORNHILL, P.E.
NAME
PRELIMINARY
MARCH 10, 2015
DATE
32367
LICENSE No.

SHEET NUMBER	2g
PARISH	LIVINGSTON
CONTROL SECTION	832-13
STATE PROJECT	H.004634
DESIGNED / CHECKED	DTT / NJF
DETAILED / CHECKED	DFH / DTT
DATE / SHEET	03-10-15

NO.	DATE	REVISION DESCRIPTION	BY

TYPICAL SECTIONS
U.S. 190 (FLORIDA BLVD.)
JUBAN ROAD (LA 1026) WIDENING

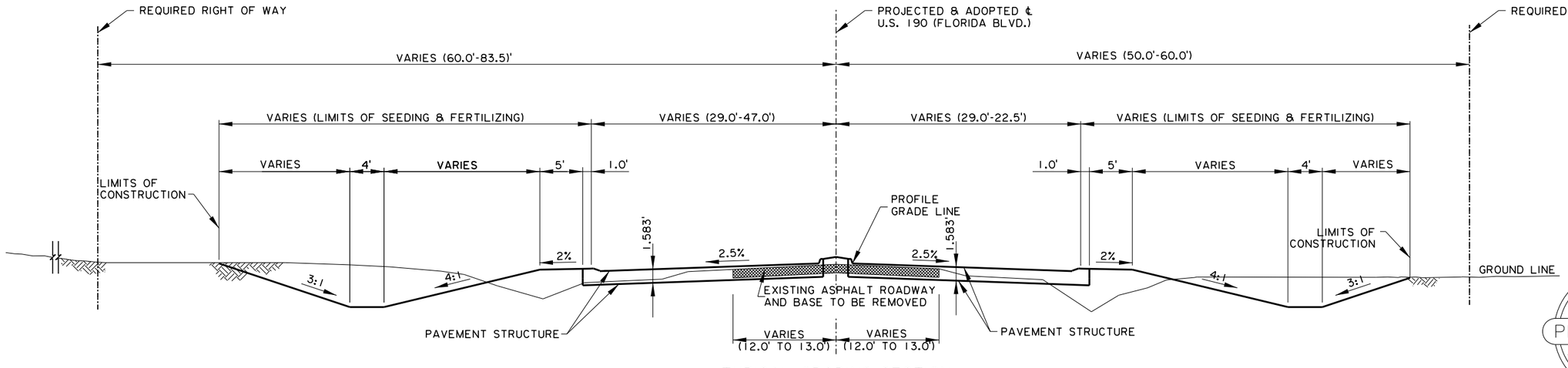

NOTE: STATIONING SHOWN IS ON PROJECTED AND ADOPTED CENTERLINE US 190 (FLORIDA BLVD.).

TYPICAL GRADING SECTION
US 190 (FLORIDA BLVD.)
UA-2 URBAN
STA. 20+43.27 TO STA. 21+89.53

DANIEL T. THORNHILL, P.E.
NAME
PRELIMINARY
MARCH 10, 2015
DATE
32367
LICENSE No.

THIS DOCUMENT IS NOT TO BE USED FOR CONSTRUCTION, BIDDING, RECORDATION, CONVEYANCE, SALES, OR AS THE BASIS FOR THE ISSUANCE OF A PERMIT.

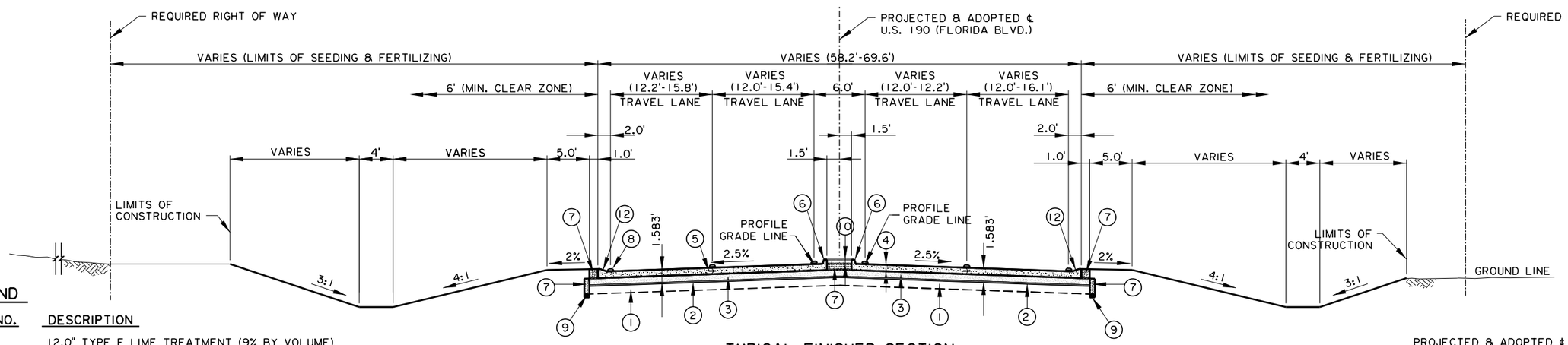

TYPICAL FINISHED SECTION
US 190 (FLORIDA BLVD.)
UA-2 URBAN
STA. 20+43.27 TO STA. 21+89.53

LEGEND

ITEM NO.	DESCRIPTION
1	12.0" TYPE E LIME TREATMENT (9% BY VOLUME) (AS DIRECTED BY THE PROJECT ENGINEER)
2	GEOTEXTILE FABRIC
3	CLASS II BASE COURSE 10" THICK (CRUSHED STONE OR RECYCLED PCCP, OR CALCIUM SULFATE) OR (6" SOIL CEMENT AND 4" CRUSHED STONE OR RECYCLED PCCP)
4	9" PORTLAND CEMENT CONCRETE PAVEMENT
5	LONGITUDINAL JOINT OR LONGITUDINAL CONSTRUCTION JOINT
6	INTEGRAL CONCRETE CURB (6" BARRIER)
7	EMBANKMENT
8	RAISED PAVEMENT MARKERS AND/OR PLASTIC PAVEMENT STRIPING. SEE STANDARD PLAN PM-01.
9	4" PERFORATED PIPE UNDERDRAIN
10	6" INCIDENTAL CONCRETE PAVEMENT
12	INTEGRAL CONCRETE CURB (4" MOUNTABLE)
13	5" SUPERPAVE ASPHALTIC CONCRETE BASE COURSE (LEVEL 1)
14	2" SUPERPAVE ASPHALTIC CONCRETE BINDER COURSE (LEVEL 2)
15	2" SUPERPAVE ASPHALTIC CONCRETE WEARING COURSE (LEVEL 2F)
16	COMBINATION CURB AND GUTTER (6" BARRIER)
17	EXISTING A.C. SURFACE TO BE MILLED (2" AVERAGE DEPTH)
18	COMBINATION CURB AND GUTTER (4" MOUNTABLE)

RIGID STRUCTURAL DESIGN	
DESIGN ADT	= 19,284
PERFORMANCE PERIOD (YEARS)	= 20
18-KIP ESALS	= 4,199,749
PCC MODULUS OF RUPTURE (PSI)	= 600
K VALUE	= 500
CALCULATED THICKNESS (INCHES)	= 8.13
THICKNESS PROVIDED (INCHES)	= 9.00

FLEXIBLE STRUCTURAL DESIGN	
DESIGN ADT	= 19,284
PERFORMANCE PERIOD (YEARS)	= 20
18-KIP ESALS	= 3,378,622
SOIL RESILIENT MODULUS (PSI)	= 9,549
STRUCTURAL NUMBER REQUIRED (INCHES)	= 4.25
STRUCTURAL NUMBER PROVIDED (INCHES)	= 4.51

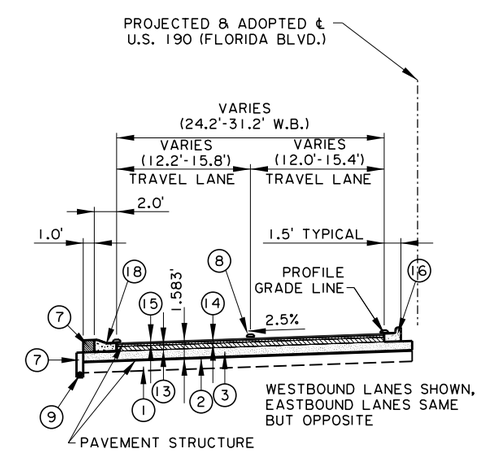

TYPICAL ALTERNATE FINISHED SECTION
US 190 (FLORIDA BLVD.)
UA-2 URBAN

SHEET NUMBER	2h
PARISH	LIVINGSTON
CONTROL SECTION	832-13
STATE PROJECT	H.004634
DESIGNED / CHECKED	DTT / NJF
DETAILED / CHECKED	DFH / DTT
DATE / SHEET	03-10-15

NO.	DATE	REVISION DESCRIPTION	BY

TYPICAL SECTIONS
U.S. 190 (FLORIDA BLVD.)
JUBAN ROAD (LA 1026) WIDENING

90% PRELIMINARY PLANS

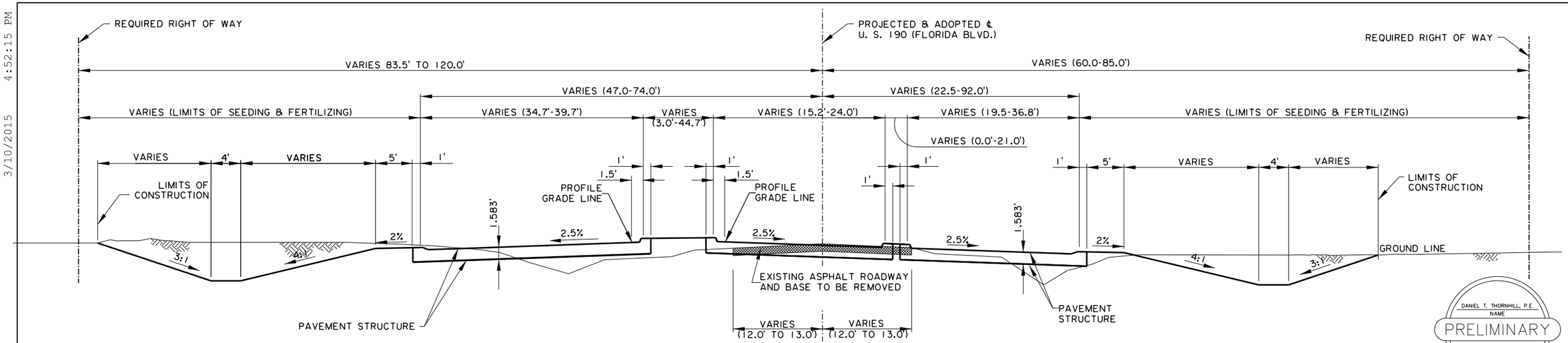

TYPICAL GRADING SECTION
US 190 (FLORIDA BLVD.)
UA-2 URBAN
STA. 21+89.53 TO STA. 22+80.00

DANIEL T. THORNHILL, P.E.
NAME
PRELIMINARY
MARCH 10, 2015
DATE
32367
LICENSE No.

THIS DOCUMENT IS NOT TO BE USED FOR CONSTRUCTION, BIDDING, RECORDATION, CONVEYANCE, SALES, OR AS THE BASIS FOR THE ISSUANCE OF A PERMIT.

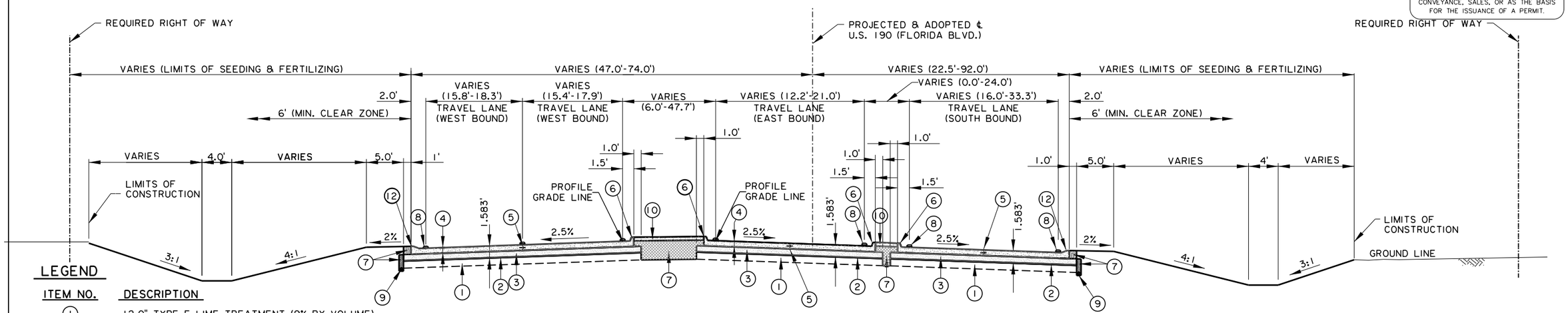

TYPICAL FINISHED SECTION
US 190 (FLORIDA BLVD.)
UA-2 URBAN
STA. 21+89.53 TO STA. 22+80.00

NOTE: STATIONING SHOWN IS ON PROJECTED AND ADOPTED CENTERLINE US 190 (FLORIDA BLVD.).

LEGEND

ITEM NO.	DESCRIPTION
1	12.0" TYPE E LIME TREATMENT (9% BY VOLUME) (AS DIRECTED BY THE PROJECT ENGINEER)
2	GEOTEXTILE FABRIC
3	CLASS II BASE COURSE 10" THICK (CRUSHED STONE OR RECYCLED PCCP, OR CALCIUM SULFATE) OR (6" SOIL CEMENT AND 4" CRUSHED STONE OR RECYCLED PCCP)
4	9" PORTLAND CEMENT CONCRETE PAVEMENT
5	LONGITUDINAL JOINT OR LONGITUDINAL CONSTRUCTION JOINT
6	INTEGRAL CONCRETE CURB (6" BARRIER)
7	EMBANKMENT
8	INDICATES RAISED PAVEMENT MARKERS AND/OR PLASTIC PAVEMENT STRIPING. SEE STANDARD PLAN PM-01.
9	4" PERFORATED PIPE UNDERDRAIN
10	6" INCIDENTAL CONCRETE PAVEMENT
12	INTEGRAL CONCRETE CURB (4" MOUNTABLE)
13	5" SUPERPAVE ASPHALTIC CONCRETE BASE COURSE (LEVEL 1)
14	2" SUPERPAVE ASPHALTIC CONCRETE BINDER COURSE (LEVEL 2)
15	2" SUPERPAVE ASPHALTIC CONCRETE WEARING COURSE (LEVEL 2F)
16	COMBINATION CURB AND GUTTER (BARRIER)
17	EXISTING A.C. SURFACE TO BE MILLED (2" AVERAGE DEPTH)
18	COMBINATION CURB AND GUTTER (MOUNTABLE)

RIGID STRUCTURAL DESIGN	
DESIGN ADT	= 19,284
PERFORMANCE PERIOD (YEARS)	= 20
18-KIP ESALS	= 4,199,749
PCC MODULUS OF RUPTURE (PSI)	= 600
K VALUE	= 500
CALCULATED THICKNESS (INCHES)	= 8.13
THICKNESS PROVIDED (INCHES)	= 9.00

FLEXIBLE STRUCTURAL DESIGN	
DESIGN ADT	= 19,284
PERFORMANCE PERIOD (YEARS)	= 20
18-KIP ESALS	= 3,378,622
SOIL RESILIENT MODULUS (PSI)	= 9,549
STRUCTURAL NUMBER REQUIRED (INCHES)	= 4.25
STRUCTURAL NUMBER PROVIDED (INCHES)	= 4.51

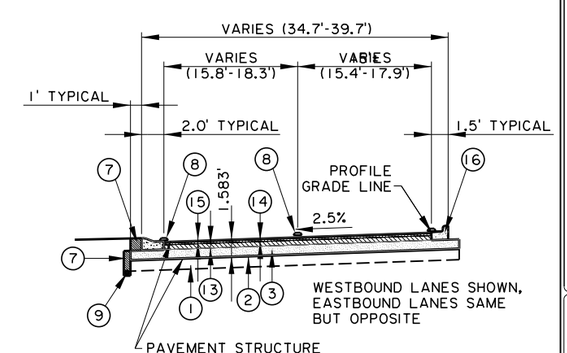

TYPICAL ALTERNATE FINISHED SECTION
US 190 (FLORIDA BLVD.)
UA-2 URBAN

90% PRELIMINARY PLANS

TYPICAL_SECTIONS_FLORIDA_SHT-2i_11198.dgn

SHEET NUMBER	2i
PARISH	LIVINGSTON
CONTROL SECTION	832-13
STATE PROJECT	H.004634
DESIGNED / CHECKED	DTT / NJF
DETAILED / CHECKED	DFH / DTT
DATE / SHEET	03-10-15

NO.	DATE	REVISION DESCRIPTION	BY

TYPICAL SECTIONS
U.S. 190 (FLORIDA BLVD.)
JUBAN ROAD (LA 1026) WIDENING

90% PRELIMINARY PLANS

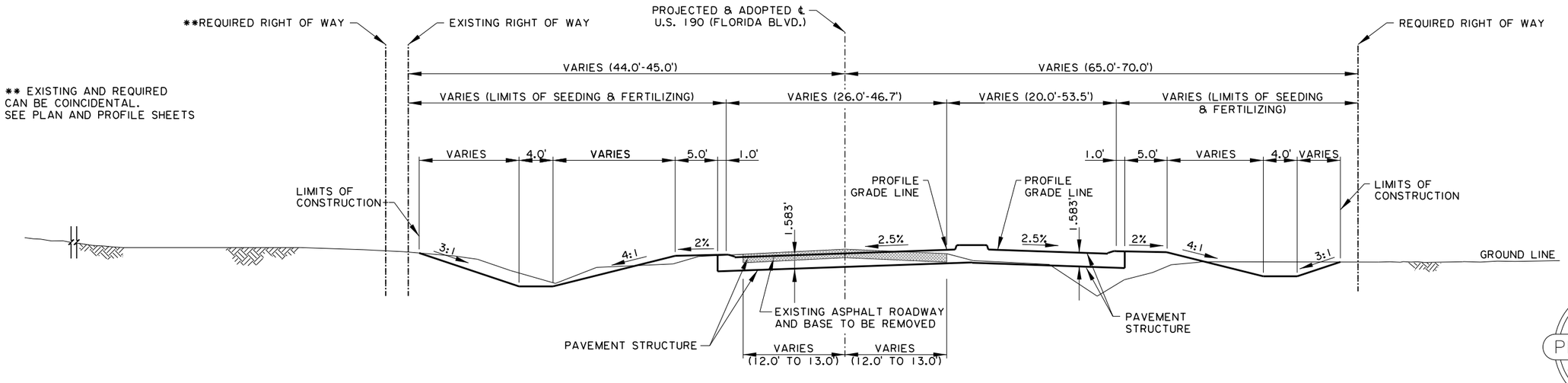

TYPICAL GRADING SECTION
US 190 (FLORIDA BLVD.)
UA-2 URBAN
STA. 24+38.10 TO STA. 27+52.00

DANIEL T. THORNHILL, P.E.
NAME
PRELIMINARY
MARCH 10, 2015
DATE
32367
LICENSE No.

THIS DOCUMENT IS NOT TO BE USED FOR CONSTRUCTION, BIDDING, RECORDATION, CONVEYANCE, SALES, OR AS THE BASIS FOR THE ISSUANCE OF A PERMIT.

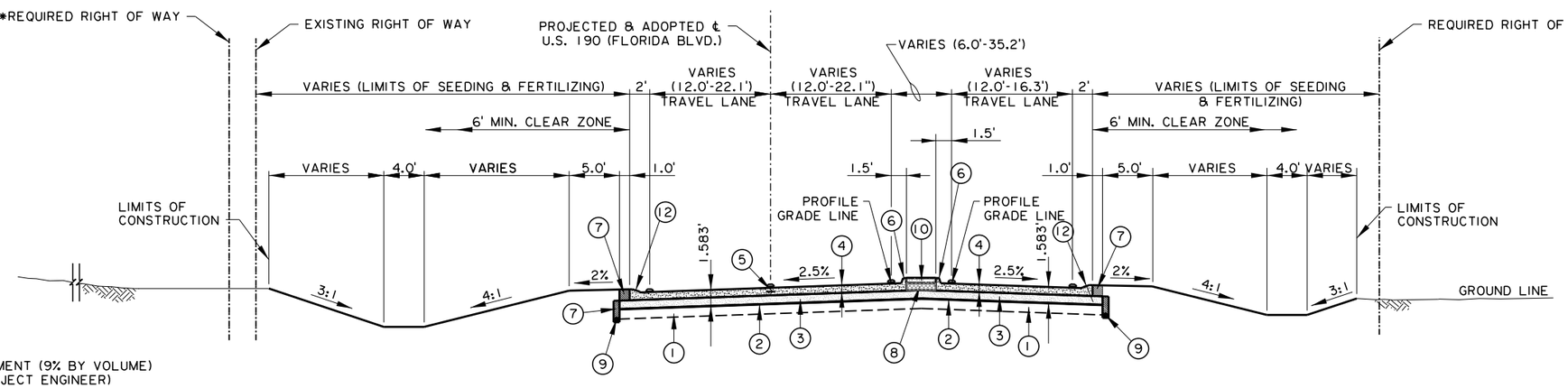

TYPICAL FINISHED SECTION
US 190 (FLORIDA BLVD.)
UA-2 URBAN
STA. 24+38.10 TO STA. 27+52.00

NOTE:
STATIONING SHOWN IS ON PROJECTED AND ADOPTED CENTERLINE US 190 (FLORIDA BLVD.).

LEGEND

ITEM NO.	DESCRIPTION
1	12.0" TYPE E LIME TREATMENT (9% BY VOLUME) (AS DIRECTED BY THE PROJECT ENGINEER)
2	GEOTEXTILE FABRIC
3	CLASS II BASE COURSE 10" THICK (CRUSHED STONE OR RECYCLED PCCP, OR CALCIUM SULFATE) OR (6" SOIL CEMENT AND 4" CRUSHED STONE OR RECYCLED PCCP)
4	9" PORTLAND CEMENT CONCRETE PAVEMENT
5	LONGITUDINAL JOINT OR LONGITUDINAL CONSTRUCTION JOINT
6	INTEGRAL CONCRETE CURB (6" BARRIER)
7	EMBANKMENT
8	INDICATES RAISED PAVEMENT MARKERS AND/OR PLASTIC PAVEMENT STRIPING. SEE STANDARD PLAN PM-01.
9	4" PERFORATED PIPE UNDERDRAIN
10	6" INCIDENTAL P.C. CONCRETE
12	INTEGRAL CONCRETE CURB (4" MOUNTABLE)
13	5" SUPERPAVE ASPHALTIC CONCRETE BASE COURSE (LEVEL 1)
14	2" SUPERPAVE ASPHALTIC CONCRETE BINDER COURSE (LEVEL 2)
15	2" SUPERPAVE ASPHALTIC CONCRETE WEARING COURSE (LEVEL 2F)
16	COMBINATION CURB AND GUTTER (BARRIER)
18	COMBINATION CURB AND GUTTER (MOUNTABLE)

RIGID STRUCTURAL DESIGN	
DESIGN ADT	= 19,284
PERFORMANCE PERIOD (YEARS)	= 20
18-KIP ESALS	= 4,199,749
PCC MODULUS OF RUPTURE (PSI)	= 600
K VALUE	= 500
CALCULATED THICKNESS (INCHES)	= 8.13
THICKNESS PROVIDED (INCHES)	= 9.00

FLEXIBLE STRUCTURAL DESIGN	
DESIGN ADT	= 19,284
PERFORMANCE PERIOD (YEARS)	= 20
18-KIP ESALS	= 3,378,622
SOIL RESILIENT MODULUS (PSI)	= 9,549
STRUCTURAL NUMBER REQUIRED (INCHES)	= 4.25
STRUCTURAL NUMBER PROVIDED (INCHES)	= 4.51

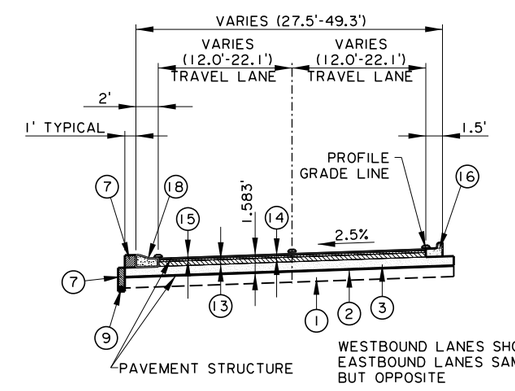

TYPICAL ALTERNATE FINISHED SECTION
US 190 (FLORIDA BLVD.)
UA-2 URBAN

SHEET NUMBER	2j
PARISH	LIVINGSTON
CONTROL SECTION	832-13
STATE PROJECT	H.004634
DESIGNED / CHECKED	DTT / NJF
DETAILED / CHECKED	DFH / DTT
DATE / SHEET	03-10-15

NO.	DATE	REVISION DESCRIPTION	BY

TYPICAL SECTIONS
U.S. 190 (FLORIDA BLVD.)
JUBAN ROAD (LA 1026) WIDENING

90% PRELIMINARY PLANS

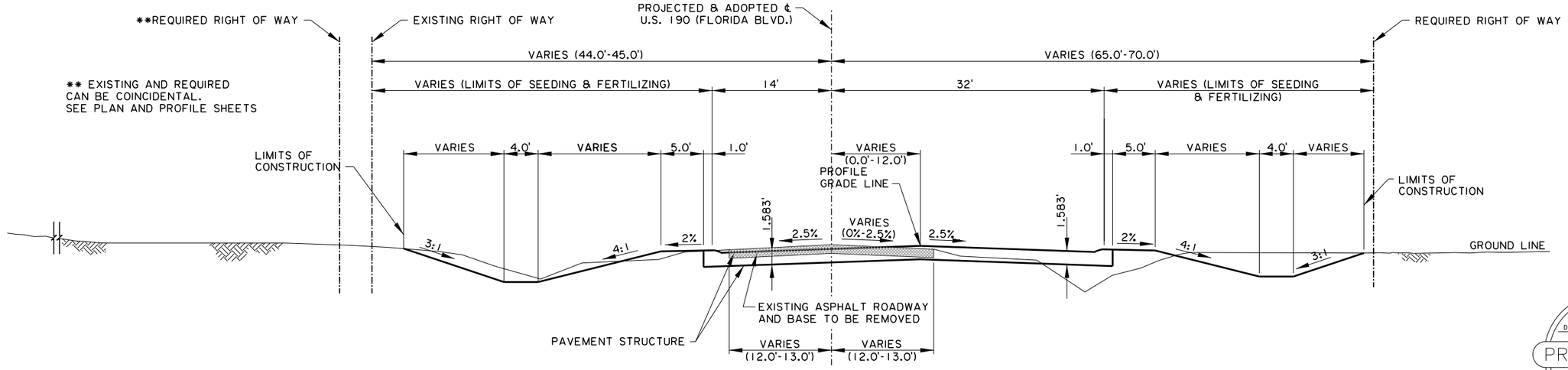

TYPICAL GRADING SECTION
US 190 (FLORIDA BLVD.)
UA-2 URBAN
STA. 27+52.00 TO STA. 29+17.50

DANIEL T. THORNHILL, P.E.
NAME
PRELIMINARY
MARCH 10, 2015
DATE
32367
LICENSE No.

THIS DOCUMENT IS NOT TO BE USED FOR CONSTRUCTION, BIDDING, RECORDATION, CONVEYANCE, OR SALES

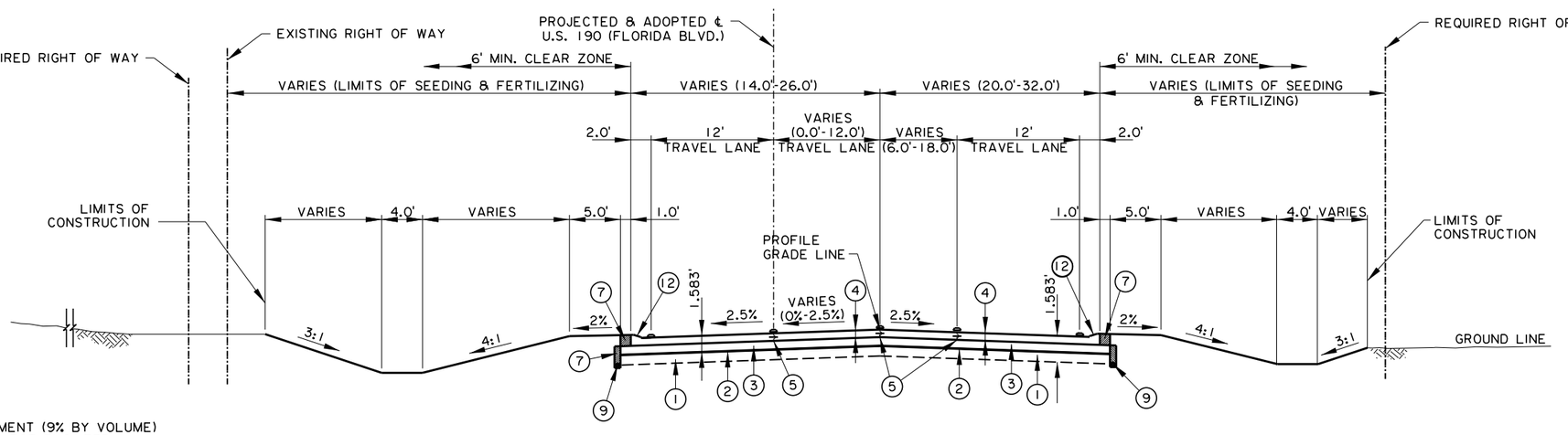

TYPICAL FINISHED SECTION
US 190 (FLORIDA BLVD.)
UA-2 URBAN
STA. 27+52.00 TO STA. 29+17.50

NOTE:
STATIONING SHOWN IS ON PROJECTED AND ADOPTED CENTERLINE US 190 (FLORIDA BLVD.).

LEGEND

ITEM NO.	DESCRIPTION
1	12.0" TYPE E LIME TREATMENT (9% BY VOLUME) (AS DIRECTED BY THE PROJECT ENGINEER)
2	GEOTEXTILE FABRIC
3	CLASS II BASE COURSE 10" THICK (CRUSHED STONE OR RECYCLED PCCP, OR CALCIUM SULFATE) OR (6" SOIL CEMENT AND 4" CRUSHED STONE OR RECYCLED PCCP)
4	9" PORTLAND CEMENT CONCRETE PAVEMENT
5	LONGITUDINAL JOINT OR LONGITUDINAL CONSTRUCTION JOINT
7	EMBANKMENT
8	RAISED PAVEMENT MARKERS AND/OR PLASTIC PAVEMENT STRIPING. SEE STANDARD PLAN PM-01.
9	4" PERFORATED PIPE UNDERDRAIN
12	INTEGRAL CONCRETE CURB (4" MOUNTABLE)
13	5" SUPERPAVE ASPHALTIC CONCRETE BASE COURSE (LEVEL 1)
14	2" SUPERPAVE ASPHALTIC CONCRETE BINDER COURSE (LEVEL 2)
15	2" SUPERPAVE ASPHALTIC CONCRETE WEARING COURSE (LEVEL 2F)
16	COMBINATION CURB AND GUTTER (BARRIER)
18	COMBINATION CURB AND GUTTER (MOUNTABLE)

RIGID STRUCTURAL DESIGN	
DESIGN ADT	= 19,284
PERFORMANCE PERIOD (YEARS)	= 20
18-KIP ESALS	= 4,199,749
PCC MODULUS OF RUPTURE (PSI)	= 600
K VALUE	= 500
CALCULATED THICKNESS (INCHES)	= 8.13
THICKNESS PROVIDED (INCHES)	= 9.00

FLEXIBLE STRUCTURAL DESIGN	
DESIGN ADT	= 19,284
PERFORMANCE PERIOD (YEARS)	= 20
18-KIP ESALS	= 3,378,622
SOIL RESILIENT MODULUS (PSI)	= 9,549
STRUCTURAL NUMBER REQUIRED (INCHES)	= 4.25
STRUCTURAL NUMBER PROVIDED (INCHES)	= 4.51

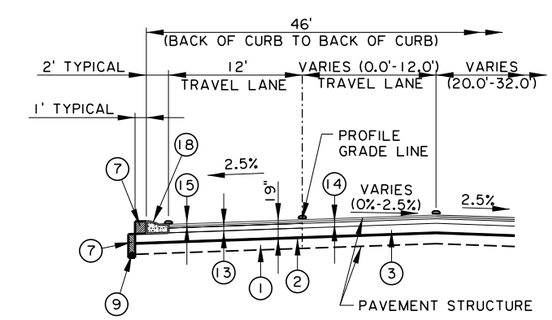

WESTBOUND LANES SHOWN, EASTBOUND LANES SAME BUT OPPOSITE

PARTIAL TYPICAL
ALTERNATE FINISHED SECTION
US 190 (FLORIDA BLVD.)
UA-2 URBAN

SHEET NUMBER	2k
PARISH	LIVINGSTON
CONTROL SECTION	832-13
STATE PROJECT	H.004634
DESIGNED / CHECKED	DTT / NJF
DETAILED / CHECKED	DFH / DTT
DATE / SHEET	03-10-15

NO.	DATE	REVISION DESCRIPTION	BY

TYPICAL SECTIONS
U.S. 190 (FLORIDA BLVD.)
JUBAN ROAD (LA 1026) WIDENING

90% PRELIMINARY PLANS

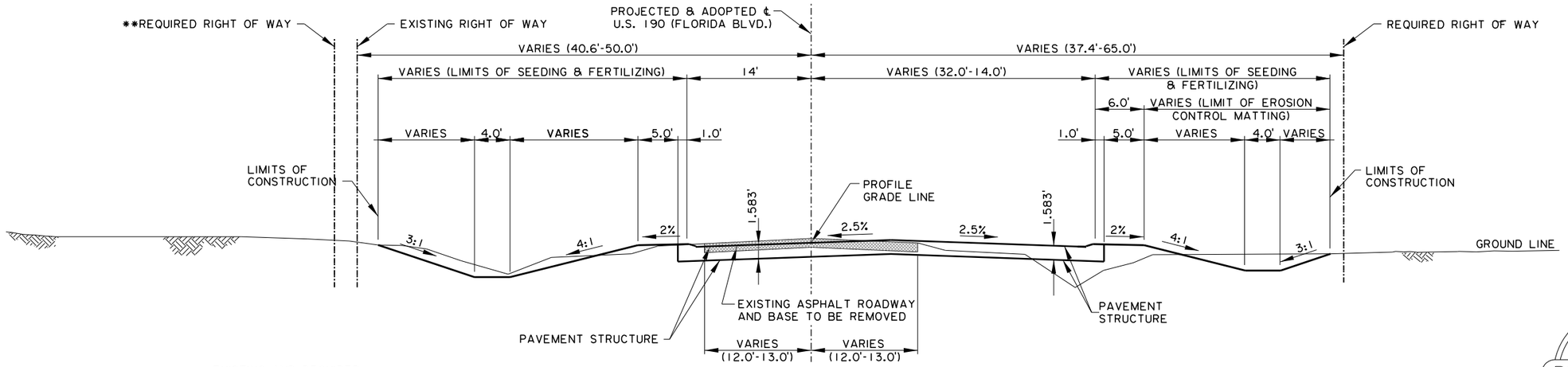

** EXISTING AND REQUIRED CAN BE COINCIDENTAL. SEE PLAN AND PROFILE SHEETS

TYPICAL GRADING SECTION
US 190 (FLORIDA BLVD.)
UA-2 URBAN
STA. 29+17.50 TO STA. 37+29.65

DANIEL T. THORNHILL, P.E.
NAME
PRELIMINARY
MARCH 10, 2015
DATE
32367
LICENSE No.

THIS DOCUMENT IS NOT TO BE USED FOR CONSTRUCTION, BIDDING, RECORDATION, CONVEYANCE, SALES, OR AS THE BASIS FOR THE ISSUANCE OF A PERMIT.

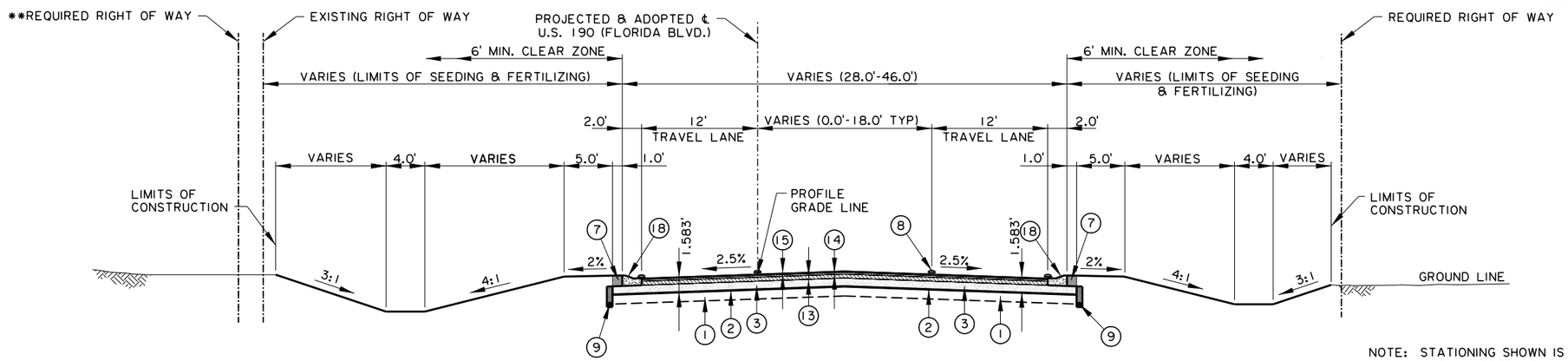

NOTE: STATIONING SHOWN IS ON PROJECTED AND ADOPTED CENTERLINE US 190 (FLORIDA BLVD.).

TYPICAL FINISHED SECTION
US 190 (FLORIDA BLVD.)
UA-2 URBAN
STA. 29+17.50 TO STA. 37+29.62

LEGEND

ITEM NO.	DESCRIPTION
1	12.0" TYPE E LIME TREATMENT (9% BY VOLUME) (AS DIRECTED BY THE PROJECT ENGINEER)
2	GEOTEXTILE FABRIC
3	CLASS II BASE COURSE 10" THICK (CRUSHED STONE OR RECYCLED PCCP, OR CALCIUM SULFATE) OR (6" SOIL CEMENT AND 4" CRUSHED STONE OR RECYCLED PCCP)
7	EMBANKMENT
8	RAISED PAVEMENT MARKERS AND/OR PLASTIC PAVEMENT STRIPING. SEE STANDARD PLAN PM-01.
9	4" PERFORATED PIPE UNDERDRAIN
13	5" SUPERPAVE ASPHALTIC CONCRETE BASE COURSE (LEVEL 1)
14	2" SUPERPAVE ASPHALTIC CONCRETE BINDER COURSE (LEVEL 2)
15	2" SUPERPAVE ASPHALTIC CONCRETE WEARING COURSE (LEVEL 2F)
18	COMBINATION CURB AND GUTTER (MOUNTABLE)

FLEXIBLE STRUCTURAL DESIGN	
DESIGN ADT	= 19,284
PERFORMANCE PERIOD (YEARS)	= 20
18-KIP ESALS	= 3,378,622
SOIL RESILIENT MODULUS (PSI)	= 9,549
STRUCTURAL NUMBER REQUIRED (INCHES)	= 4.25
STRUCTURAL NUMBER PROVIDED (INCHES)	= 4.51

SHEET NUMBER 21

PARISH: LIVINGSTON
CONTROL SECTION: 832-13
STATE PROJECT: H.004634

DESIGNED: DTT
CHECKED: NJF
DETAILED: DFH
CHECKED: DTT
DATE: 03-10-15
SHEET

NO.	DATE	REVISION DESCRIPTION	BY

TYPICAL SECTIONS
U.S. 190 (FLORIDA BLVD.)
JUBAN ROAD (LA 1026) WIDENING

STATE OF LOUISIANA
DEPARTMENT OF TRANSPORTATION AND DEVELOPMENT
DOTD

90% PRELIMINARY PLANS

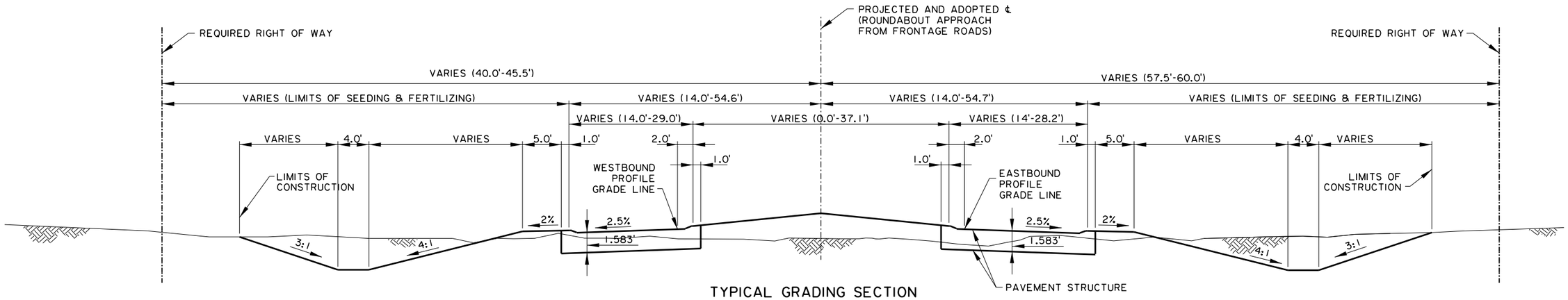

TYPICAL GRADING SECTION
FRONTAGE ROAD ACCESS
UL-2 URBAN LOCAL
STA. 50+12.00 TO STA. 57+90.33
(EXCLUDE STA. 53+55.90 TO STA. 55+30.90)

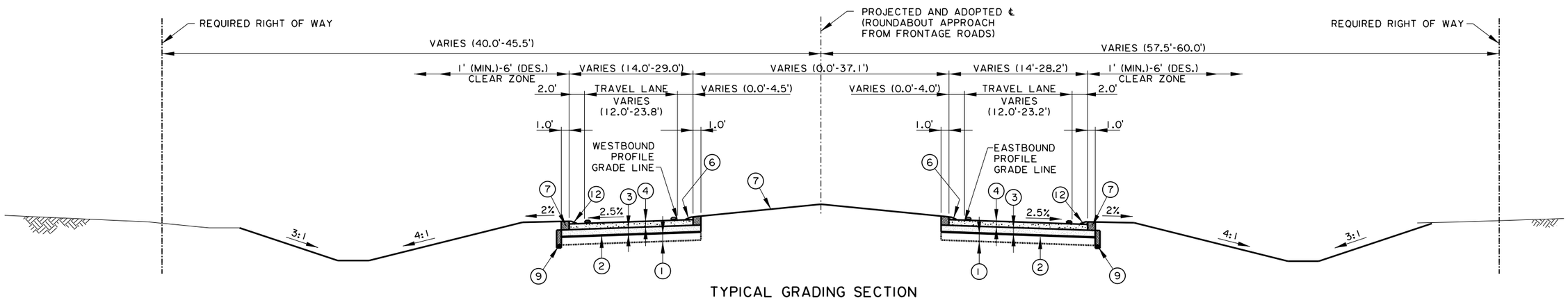

TYPICAL GRADING SECTION
FRONTAGE ROAD ACCESS
UL-2 URBAN LOCAL
STA. 50+12.00 TO STA. 53+38.67
STA. 55+13.67 TO STA. 55+30.90

LEGEND

ITEM NO.	DESCRIPTION
1	12.0" TYPE E LIME TREATMENT (9% BY VOLUME) (AS DIRECTED BY THE PROJECT ENGINEER)
2	GEOTEXTILE FABRIC
3	CLASS II BASE COURSE 10" THICK (CRUSHED STONE OR RECYCLED PCCP, OR CALCIUM SULFATE) OR (6" SOIL CEMENT AND 4" CRUSHED STONE OR RECYCLED PCCP)
4	9" PORTLAND CEMENT CONCRETE PAVEMENT
5	LONGITUDINAL JOINT OR LONGITUDINAL CONSTRUCTION JOINT
6	INTEGRAL CONCRETE CURB (BARRIER)
7	EMBANKMENT
8	RAISED PAVEMENT MARKERS AND/OR PLASTIC PAVEMENT STRIPING. SEE STANDARD PLAN PM-01.
9	4" PERFORATED PIPE UNDERDRAIN
12	INTEGRAL CONCRETE CURB (4" MOUNTABLE)

NOTE: PAVEMENT INFO IS ASSUMED. LA DOTD TO PROVIDE PAVEMENT SECTION.

RIGID STRUCTURAL DESIGN	
DESIGN ADT	= 19,284
PERFORMANCE PERIOD (YEARS)	= 20
18-KIP ESALS	= 4,199,749
PCC MODULUS OF RUPTURE (PSI)	= 600
K VALUE (PSI/IN)	= 500
CALCULATED THICKNESS (INCHES)	= 8.13
THICKNESS PROVIDED	= 9.0

NOTE: STATIONING SHOWN IS ON PROJECTED AND ADOPTED CENTERLINE FRONTAGE ROAD.

DANIEL T. THORNHILL, P.E.
NAME
PRELIMINARY
MARCH 10, 2015
DATE
32367
LICENSE No.

THIS DOCUMENT IS NOT TO BE USED FOR CONSTRUCTION, BIDDING, RECORDATION, CONVEYANCE, SALES, OR AS THE BASIS FOR THE ISSUANCE OF A PERMIT.

SHEET NUMBER	2m
PARISH	LIVINGSTON
CONTROL SECTION	832-13
STATE PROJECT	H.004634
DESIGNED / CHECKED	DTT / NJF
DETAILED / CHECKED	DFH / DTT
DATE / SHEET	03-10-15

NO.	DATE	REVISION DESCRIPTION	BY

TYPICAL SECTIONS
FRONTAGE ROAD EAST/WEST
APPROACH TO ROUNDABOUT
JUBAN ROAD (LA 1026) WIDENING

90% PRELIMINARY PLANS

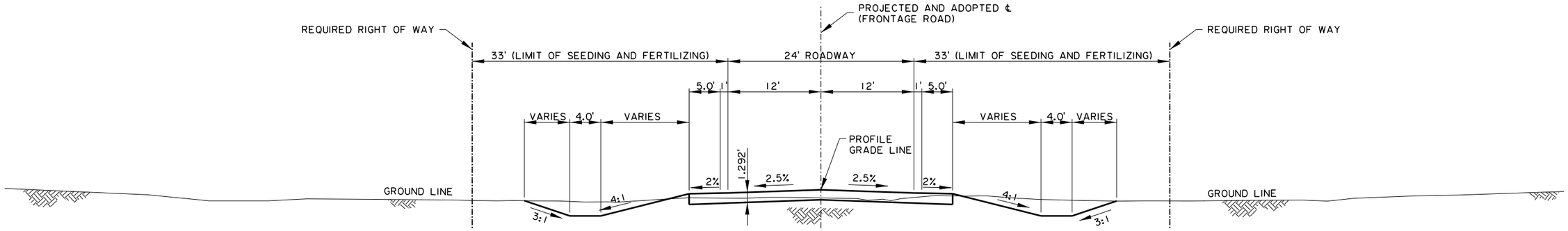

TYPICAL GRADING SECTION
FRONTAGE ROAD
UL-2 URBAN LOCAL
STA. 21+11.96 TO STA. 27+06.16 (WEST SIDE)
STA. 21+90.00 TO STA. 26+02.32 (EAST SIDE)

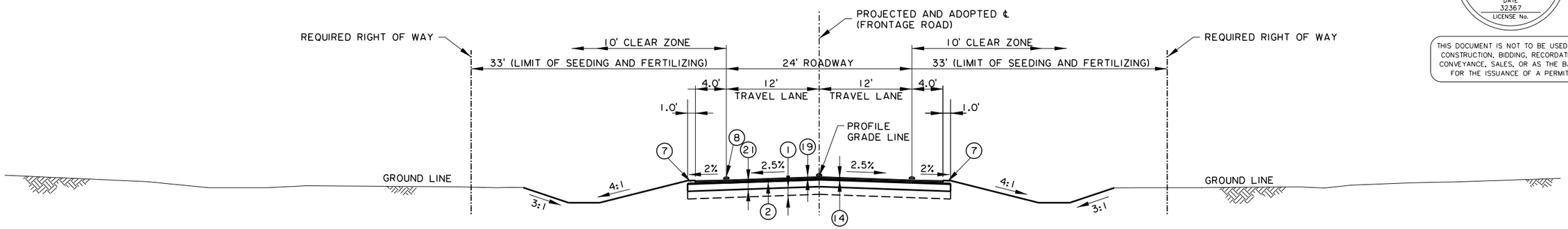

TYPICAL FINISHED SECTION
FRONTAGE ROAD
UL-2 URBAN LOCAL
STA. 21+09.66 TO STA. 27+06.35 (WEST SIDE)
STA. 21+87.91 TO STA. 26+02.08 (EAST SIDE)

LEGEND

ITEM NO.	DESCRIPTION
1	12.0" TYPE E LIME TREATMENT (9% BY VOLUME) (AS DIRECTED BY THE PROJECT ENGINEER)
2	GEOTEXTILE FABRIC
7	EMBANKMENT
8	INDICATES RAISED PAVEMENT MARKERS AND/OR PLASTIC PAVEMENT STRIPING. SEE STANDARD PLAN PM-01.
14	2" SUPERPAVE ASPHALTIC CONCRETE BINDER COURSE (LEVEL 2)
19	1½" SUPERPAVE ASPHALTIC CONCRETE WEARING COURSE (LEVEL 2F)
21	12.0" IN-PLACE CEMENT TREATED BASE COURSE

FLEXIBLE STRUCTURAL DESIGN	
DESIGN ADT	=
PERFORMANCE PERIOD (YEARS)	= 20
18-KIP ESALS	=
SOIL RESILIENT MODULUS (PSI)	= 9,549
STRUCTURAL NUMBER REQUIRED (INCHES)	=
STRUCTURAL NUMBER PROVIDED (INCHES)	=

NOTE: STATIONING SHOW IS ON PROJECTED AND ADOPTED CENTERLINE FRONTAGE ROAD.

DANIEL T. THORNHILL, P.E.
NAME
PRELIMINARY
MARCH 10, 2015
DATE
32367
LICENSE No.

THIS DOCUMENT IS NOT TO BE USED FOR CONSTRUCTION, BIDDING, RECORDATION, CONVEYANCE, SALES, OR AS THE BASIS FOR THE ISSUANCE OF A PERMIT.

SHEET NUMBER	2n
PARISH	LIVINGSTON
CONTROL SECTION	832-13
STATE PROJECT	H.004634
DESIGNED / CHECKED	DTT / NJF
DETAILED / CHECKED	DFH / DTT
DATE / SHEET	03-10-15

NO.	DATE	REVISION DESCRIPTION	BY

TYPICAL SECTIONS
FRONTAGE ROAD

JUBAN ROAD (LA 1026) WIDENING

Appendix **C**

Traffic Volume Data

DEPARTMENT OF TRANSPORTATION AND DEVELOPMENT
DATA COLLECTION AND ANALYSIS SECTION
P. O. BOX 94245
BATON ROUGE, LOUISIANA 70804-9245
(225) 379-1925

TRAFFIC ASSIGNMENT

DATE:	31-Aug-12
PROJECT NO.	H.0046343.5
NAME:	Juban Road (La. 1026) Widening (I-12 - US 190)
DESCRIPTION:	
ROUTE:	La. 1026
FUNCTIONAL CLASS:	Urban Minor Arterial
PARISH:	Livingston

2014 ADT =	6,400	ANN. GROWTH	3.0%
2034 ADT =	11,600		

D =	55%
K =	10%
T =	9%

AXLE DISTRIBUTION

VEHICLE TYPE	PERCENT	2014 ADT	2034 ADT	MEDIAN YEAR
1 MOTORCYCLES	0.20%	13	23	18
2 PASSENGER CARS	64.10%	4,102	7,436	5,769
3 2A-4T SINGLE UNIT	25.80%	1,651	2,993	2,322
4 BUSES	0.50%	32	58	45
5 2A-6T SINGLE UNIT	4.60%	294	534	414
6 3A SINGLE UNIT	2.10%	134	244	189
7 4A SINGLE UNIT	0.10%	6	12	9
8 4A SINGLE TRAILER	1.20%	77	139	108
9 5A SINGLE TRAILER	1.10%	70	128	99
10 6A SINGLE TRAILER	0.20%	13	23	18
11 5A MULTI-TRAILER	0.00%	-	-	-
12 6A MULTI-TRAILER	0.00%	-	-	-
13 7A MULTI-TRAILER	0.10%	6	12	9
TOTALS		6,400	11,600	9,000

The above traffic data is an estimate based on data available at the time of preparation.

SUBMIT TO:	Peggy Jo Paine	SECTION:	34
COPY TO:	Jeff Lambert	SECTION:	67
PREPARED BY:	Dan Broussard/ John Spragio		

Appendix **D**

Anticipated Relocations

September 19, 2013

CONCEPTUAL STAGE RELOCATION PLAN

STATE PROJECT NO. H.004634
JUBAN ROAD WIDENING (I-12 TO US 190)
ROUTE LA 1026
LIVINGSTON PARISH

The proposed project will displace an estimated twenty-five (25) families with an average number of three (3) members. Indications are that all displaced families are of medium income range and that no displaced families are of a minority race. It is believed that all families estimated to be displaced, with the exception of possibly eight (8), are owner- occupants. Estimated values of the residences range from $20,000 to $200,000.00 with the average being $75,000. Ten (10) of the twenty-five (25) families occupy mobile homes and only replacement sites will be required. Six (6) residences are of frame construction while one (1) is brick veneer. Eight (8) are tenants residing in an apartment complex. All residences appear to be well maintained and it is believed that all meet decent, safe, and sanitary standards.

The proposed project will be along the existing alignment of Route LA 1026 and there should be no divisive or disruptive effect on the community. There should be no impact on the neighborhood or housing where the relocation is likely to take place, as historically the majority of displacees in rural or semi-rural areas choose to relocate on their remainder properties or in the general area displacement.

There is adequate replacement housing available for tenants in the general area. A recent survey in the immediate area revealed 6 properties for rent in the $ 950 to $ 1,135 a month range.

No special or unusual conditions have been identified. No discussions have been held with local officials or community groups regarding potential displacements, but none are anticipated at this time. As stated above, replacement housing is adequate in the areas of displacement. Based on past experiences it is likely that the great majority of owner-occupants being displaced on a project will relocate on their remainder properties (retain and move back or construct new). Also, owner-occupants without sufficient sized remainders on which to relocate historically have been successful in securing replacement sites in the general area of displacement through sources seldom available to the general public.

In conclusion, we do not anticipate any unusual problems in providing replacement housing under our normal procedures. However, if it should become necessary, we would employ housing of last resort.

The estimated cost for right of way is **$6,500,000.00**. The estimated cost for relocation assistance is **$436,680.00.**

ATTACHMENTS: Conceptual Stage Relocation Inventory
Conceptual Stage Replacement Property Inventory

CONCEPTUAL STAGE RELOCATION INVENTORY

STATE PROJECT NO. H.004634
F.A.P.
HIGHWAY JUBAN ROAD WIDENING (I-12 TO US 190)
ROUTE LA 1026
PARISH LIVINGSTON

			RESIDENTIAL					NON-RESIDENTIAL			
ADDRESS /LOCATION	STYLE / TYPE	CLASS/ RACE	VALUE/ MO. RENT	# BRS	EST. INCOME	RHP	MOVING	TYPE ACTIVITY	WORKERS BY RACE	MOVING	REEST/
28760 Juban Rd #1	T	O/W		3	L		20000				
28760 Juban Rd #2	T	O/W		3	L		20000				
28760 Juban Rd #3	T	O/W		1	L		10000				
28760 Juban Rd #4	T	O/W		1	L		10000				
28760 Juban Rd #5	T	O/W		3	L		20000				
28760 Juban Rd #6	T	O/W		1	L		10000				
28760 Juban Rd #7	T	O/W		1	L		10000				
28760 Juban Rd #8	T	O/W		3	L		20000				
28825 Juban Rd	S	O/W	75000	2	L		25000				
29076 Juban Rd	S/B	O/W	200000	3	M		25000				
29133 Juban Rd	S/F	O/W	175000	3	M		25000				
29320 Juban Rd	S/F	O/W	130000	4	M		25000				
29310 Juban Rd	T	O/W		4	M		20000				
29425 Juban Rd	S/F	O/W	55000	1	L		25000				
29630 Juban Rd	S/F	O/W	75000	3	M		25000				
29650 Juban Rd	S/F	O/W	90000	4	M		25000				
Florida Blvd	T	O/W		3	M		20000				
8473 Florida Blvd 1A	S/M	T/W	800	2	M	10710	2000				
8473 Florida Blvd 2A	S/M	T/W	800	2	M	10710	2000				
8473 Florida Blvd 3A	S/M	T/W	800	2	M	10710	2000				
8473 Florida Blvd 4A	S/M	T/W	800	2	M	10710	2000				
8473 Florida Blvd 1E	S/M	T/W	800	2	M	10710	2000				
8473 Florida Blvd 2E	S/M	T/W	800	2	M	10710	2000				
8473 Florida Blvd 3E	S/M	T/W	800	2	M	10710	2000				
8473 Florida Blvd 4E	S/M	T/W	800	2	M	10710	2000				

NOTE: Information listed herein is based on estimates and secondary sources.

STYLE	TYPE	CLASS	RACE	INCOME
S single family	B brick veneer	O owner	B Black	L low
D duplex	M masonry	T tenant	S Spanish	M middle
M multi-family	F wood frame		O Oriental	u upper
R sleeping room	C combination		I Indian	
T mobile home	A metal		W Other	
B business	O other			
F farm				
N non-profit				
C combination bus-res				

Line Study: _____
Sheet 1 of 2
Prepared by Robyn Ross Date 9/20/2013

CONCEPTUAL STAGE REPLACEMENT PROPERTY INVENTORY

STATE PROJECT NO. H.004634
F.A.P.
HIGHWAY JUBAN ROAD WIDENING (I-12 TO US 190)
ROUTE LA 1026
PARISH LIVINGSTON

ADDRESS / LOCATION	STYLE	TYPE	NO. OF BEDROOMS	VALUE / MO. RE
31050 LA Hwy. 16, Denham Springs, LA 70726	S	B	3	1105.00 Mo
8275 Vincent Rd., Denham Springs, LA 70726	S	B	3	1055.00 Mo
8429 Florida Blvd., Denham Springs, LA 70726	S	B	3	1055.00 Mo
11000 Buddy Ellis Rd., Denham Springs, LA 70726	S	B	3	1295.00 Mo
7615 Magnolia Beach Rd, Denham Springs, LA 70726	S	B	3	1135.00 Mo
10888 Buddy Ellis Rd., Denham Springs, LA 70726	S	B	3	950.00 Mo

NOTE: Information listed herein is based on estimates and secondary sources.

STYLE

S single family
D duplex
M multi-family
R sleeping room
T mobile home
B business
F farm
N non-profit
C combination bus-res

TYPE

B brick veneer
M masonry
F wood frame
C combination
A metal
O other

Sheet 2 of 1
Prepared by Robyn Ross Date 9/20/2013

Appendix **E**

Proposed Driveway Removals

PROPOSED DRIVEWAY REMOVALS

Station	Route	Side of Road	Action
176+60	Juban Rd	east	Removed – undeveloped driveway apron
179+60	Juban Rd	east	Removed – undeveloped driveway apron
182+25	Juban Rd	west	Removed – undeveloped driveway apron
183+00	Juban Rd	west	Removed – undeveloped driveway apron
183+50	Juban Rd	west	Removed – anticipated relocation (horseshoe driveway)
184+25	Juban Rd	west	Removed – anticipated relocation (horseshoe driveway)
184+25	Juban Rd	east	Removed – site has multiple driveways; removed undeveloped driveway
184+60	Juban Rd	west	Removed – undeveloped driveway apron
186+36	Juban Rd	west	Removed – undeveloped driveway apron
187+00	Juban Rd	west	Removed – anticipated connection to frontage road
187+50	Juban Rd	west	Removed – anticipated connection to frontage road
187+90	Juban Rd	west	Removed – undeveloped driveway apron
188+00	Juban Rd	east	Removed – anticipated connection to frontage road
188+40	Juban Rd	east	Removed – anticipated relocation
188+60	Juban Rd	west	Removed – undeveloped driveway apron
189+50	Juban Rd	west	Removed – anticipated relocation
190+30	Juban Rd	west	Removed – undeveloped driveway apron
190+30	Juban Rd	east	Removed – anticipated connection to frontage road
191+00	Juban Rd	west	Removed – anticipated connection to frontage road
191+60	Juban Rd	west	Removed – anticipated connection to frontage road
191+60	Juban Rd	east	Removed – anticipated connection to frontage road
191+90	Juban Rd	east	Removed – anticipated connection to frontage road
192+35	Juban Rd	west	Removed – site has multiple driveways; primary driveway to frontage road
193+10	Juban Rd	east	Removed – site has multiple driveways; primary driveway to frontage road
194+75	Juban Rd	east	Removed – undeveloped driveway apron
201+50	Juban Rd	east	Removed – undeveloped driveway apron
203+00	Juban Rd	east	Removed – anticipated relocation (multiple driveways)
202+90	Juban Rd	west	Removed – anticipated relocation (multiple driveways)
203+35	Juban Rd	west	Removed – vacant lot (multiple driveways)
207+90	Juban Rd	east	Removed – undeveloped driveway apron
18+55	US 190	south	Removed – site has multiple driveways; primary driveway at 20+00
20+90	US 190	south	Removed – site has multiple driveways; primary driveway at 20+00
25+00	US 190	south	Removed – vacant lot (multiple driveways)
29+45	US 190	south	Removed – site has multiple driveways; primary driveway at 27+30
34+10	US 190	south	Removed – undeveloped driveway apron

Appendix **F**

Solicitation of Views Correspondence

STATE OF LOUISIANA
DEPARTMENT OF TRANSPORTATION AND DEVELOPMENT
P.O. Box 94245
Baton Rouge, Louisiana 70804-9245
www.dotd.la.gov
225.242.4502

BOBBY JINDAL
GOVERNOR

SHERRI H. LEBAS, P.E.
SECRETARY

January 17, 2013

STATE PROJECT NO. H.004634
FEDERAL AID PROJECT NO. H004634
JUBAN ROAD WIDENING (I-12 TO US 190)
LA 1026
LIVINGSTON PARISH

TO: Solicitation of Views Mailing List

SUBJECT: **SOLICITATION OF VIEWS**

Early in the planning stages of a transportation facility, views from federal, state, and local agencies, organizations, and individuals are solicited. The special expertise of these groups can assist DOTD with the early identification of possible adverse economic, social, or environmental effects or concerns. Your assistance in this regard will be appreciated.

Due to the earliness of this request for your views, very limited data concerning the proposed project exists. We have, however, attached a map showing the general location of the proposed project, along with a preliminary project description.

It is requested that you review the attached information and furnish us with your views and comments by **February 22, 2013**. Replies should be addressed to LA DOTD; Environmental Engineer Administrator; P.O. Box 94245; Baton Rouge, Louisiana 70804-9245. Please reference the State Project Number in your reply.

If you have any questions or require additional information, please contact Cyndi Bowman at 225.242.4510.

Sincerely,

for Noel Ardoin
Environmental Engineer Administrator

Attachments
NA/clb
ec: District Administrator
District Traffic Operations Engineer

AN EQUAL OPPORTUNITY EMPLOYER
A DRUG-FREE WORKPLACE
02 53 2010

PRELIMINARY PROJECT DESCRIPTION

STATE PROJECT NO. H.004634
FEDERAL AID PROJECT NO. H004634
JUBAN ROAD WIDENING (I-12 TO US 190)
LA 1026
LIVINGSTON PARISH

The Louisiana Department of Transportation and Development (LDOTD) is proposing to widen Juban Road (LA 1026) from I-12 to US 190 in Livingston Parish, LA. The proposed project begins on Juban Road just north of I-12 (30.468754, -90.918723 DD) and proceeds north to the intersection of US 190 (30.483915, -90.917491 DD) as shown on the attached map. The proposed project is located in Section 4 of Township 07S Range 03E and Sections 47 & 33 of Township 06S Range 03E. The purpose of this project is to relieve traffic congestion on Juban Road, which connects I-12 and US 190, and to improve access to I-12 and the medical/library complex located west of the intersection.

The proposed project was originally part of an Environmental Assessment for the Juban Road Interchange at I-12 which was environmentally approved on September 19, 2002. At that time, the proposed widening of Juban Road from I-12 to US 190 consisted of the construction of four 12-foot wide travel lanes; a 14-foot wide continuous center turn lane; and curb and gutter drainage. The newly proposed project calls for the replacement of the existing roadway with a new roadway that meets current design criteria, which includes the Department's Complete Streets Policy and Access Management Policy.

The existing roadway consists of two 12-foot wide travel lanes with 5-foot wide aggregate shoulders, open ditches, and no median. The proposed widening project would be constructed approximately along the existing center line of the roadway with additional right-of-way required on both sides. The proposed new roadway would have an approximate 180-foot clear roadway consisting of four 12-foot wide travel lanes with shoulders; a 5-foot wide raised median (back of curb to back of curb); and a 10-foot wide bicycle/pedestrian shared-use path constructed on each side of the roadway. The new roadway would be constructed with concrete curb and gutter drains and a subsurface drainage system for the length of the project. The construction of three new roundabouts is proposed: one located just north of I-12, one located mid-way along the project corridor approximately 1,600 feet south of the intersection of US 190, and one located at the intersection of Juban Road and US 190.

LDOTD's Access Management Policy is proposed to be implemented through the use of a raised median with right-in / right-out only (i.e. no left-out turns) from residential and business driveways as well as adjacent roadways. The two proposed roundabouts located south of the Juban Road/US 190 intersection would allow for U-turns to accommodate left turn maneuvers that will be restricted by the raised median.

Average Daily Traffic values for Juban Road are 6,400 for 2014 and 11,600 for 2034. The roadway is classed as an urban minor arterial road (UA-2). Juban Road would remain open and through and local traffic would be maintained at all times. Overall project length would be approximately 1.2 miles.

Additional construction work would consist of clearing and grubbing, earthwork, roadway widening, base course, and Superpave asphaltic concrete surfacing. Wetlands may be impacted. Residential and business relocations are anticipated.

The methodology anticipated to be used to screen alternatives for this proposed project will include the use of readily available GIS information, aerial photographs, and/or site visits. Impacts and benefits will be identified and weighed to focus on a preferred alternative. Analyses will include wetlands, threatened and endangered species, cultural resources, business and residential relocations, community, environmental justice, noise, air, and contamination concerns.

During the environmental process for this project, it is anticipated that a public meeting would be held. Other public involvement activities may include a follow-up mailing/emailing of updated project information to interested parties and public meeting attendees or an additional public meeting. It is anticipated that this project would be environmentally processed as an Environmental Assessment.

In addition to your comments on the project in general, we respectfully request your comments on the preliminary purpose and need, screening methodology, range of alternatives, and planned coordination efforts. This information will be helpful in the development of the Environmental Assessment for this proposed project.

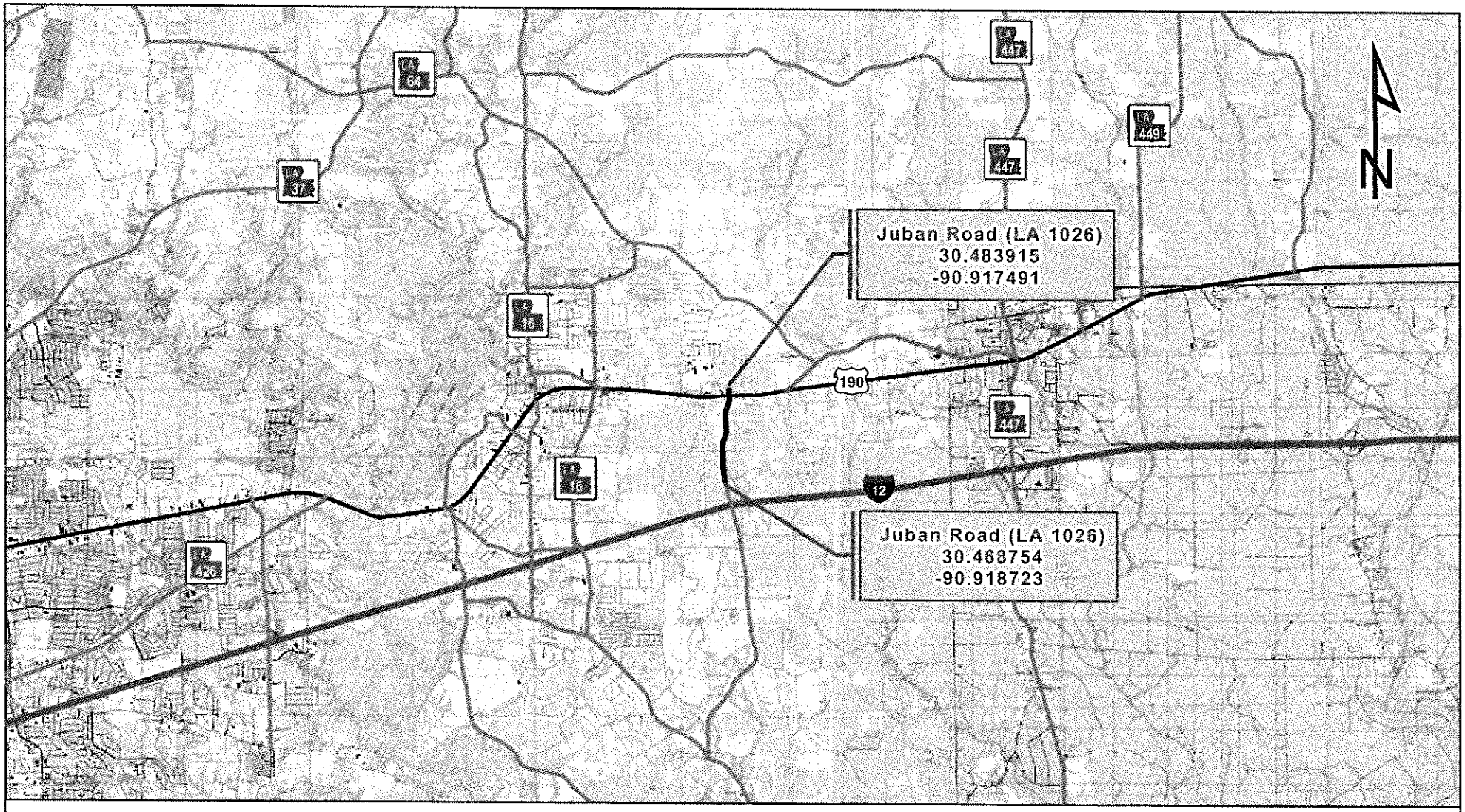

2 1 0 2 Miles

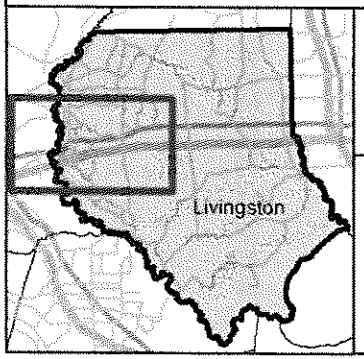

PROJECT LOCATION

SOURCE: USGS 7.5' TOPOGRAPHIC MAP

STATE PROJECT NO. H.004634
FEDERAL AID PROJECT NO. H004634
JUBAN ROAD WIDENING (I-12 TO US 190)
LA 1026
LIVINGSTON PARISH

LOUISIANA'S ON THE MOVE...
DOTD
BUILDS THE WAY

US House of Representatives

U.S. House of Representatives (District 1)
Honorable Steve Scalise
201 S. Cate St. Suite E
Hammond, LA 70403

U.S. House of Representatives (District 2)
Honorable Richmond Cedric
2021 Lakeshore Dr. Suite 309
New Orleans, LA 70122

U.S. House of Representatives (District 3)
Honorable Jeff Landry
423 Lafayette St. Suite 107
Houma, LA 70360

U.S. House of Representatives (District 4)
Honorable John Fleming
6425 Youree Dr. Suite 350
Shreveport, LA 71105

U.S. House of Representatives (District 5)
Honorable Rodney Alexander
1900 Stubbs Ave Suite B
Monroe, LA 71201

U.S. House of Representatives (District 6)
Honorable Bill Cassidy
5555 Hilton Ave Suite 100
Baton Rouge, LA 70808

U.S. House of Representatives (District 7)
Honorable Charles W. Boustany Jr.
800 Lafayette St Suite 1400
Lafayette, LA 70501

US Senate

United States Senate
Senator David Vitter
2800 Veterans Memorial Blvd Suite 201
Metairie, LA 70002

United States Senate
Senator Mary Landrieu
Hale Boggs Federal Building
500 Poydras St. Rm. 1005
New Orleans, LA 70130

Dept of Agriculture and Forestry

Department of Agriculture and Forestry
Office of Soil/Water Conservation
P.O. Box 3554
Baton Rouge, LA 70821

Department of Agriculture and Forestry
Office of Forestry
P.O. Box 1628
Baton Rouge, LA 70821

Coalition to Restore Coastal LA

Coalition to Restore Coastal Louisiana
Steven Peyronnin, Executive Director
6160 Perkins Rd. Suite 225
Baton Rouge, LA 70808

Coast Guard

8th Coast Guard District
District Commander
Hale Boggs Federal Building
500 Poydras St.
New Orleans, LA 70130

Dept of Culture Recreation and Tourism

Department of Culture Recreation & Tourism
Division of Archaeology
P.O. Box 44247
Capitol Annex 3rd
Baton Rouge, LA 70804

Department of Culture Recreation & Tourism
Office of State Parks
P.O. Box 44426
Baton Rouge, LA 70804

Division of Administration

Division of Administration
State Land Office
P.O. Box 44124
Baton Rouge, LA 70804

Division of Administration
State Planning Office
P.O. Box 94095
Baton Rouge, LA 70804

Dept of Economic Development

Department of Economic Development
Office of Business Development
P.O. Box 94185
Baton Rouge, LA 70804

Environmental Protection Agency

Environmental Protection Agency
Source Water Protection (6WQ-S)
1445 Ross Ave
Dallas, TX 75202-2733

Environmental Protection Agency
Federal Activities BR (6E-F)
1445 Ross Ave
Dallas, TX 75202-2733

Dept of Environmental Quality

Would like emailed version
LA Department of Environmental Quality
Beth Altazan-Dixon,
Office of the Secretary
P.O. Box 4301
Baton Rouge, LA 70821

Federal Transit Administration

Federal Transit Administration Region 6
819 Taylor St. Rm. 8A36
Fort Worth, TX 76102

FEMA

FEMA Region VI
800 North Loop 288
Denton, TX 76209

US Fish & Wildlife Service

U.S. Fish & Wildlife Service
646 Cajun Dome Blvd. Suite 400
Lafayette, LA 70506

LA Forestry

Louisiana Forestry Association
Executive Director
P.O. Box 5067
Alexandria, LA 71301

LA Good Roads

Louisiana Good Roads Association
P.O. Box 3713
Baton Rouge, LA 70821

Dept of Health and Hospitals

Department of Health and Hospitals
Tenney Sibley, Chief Sanitarian
628 N. 4th St.
Baton Rouge, LA 70802

Department of Health and Hospitals
Division of Environmental Health
ATTN: Steven Davis, P.E.
P.O. Box 4489
Baton Rouge, LA 70821

Indian Tribe Offices

Office of Indian Affairs
Director
P.O. Box 94004
Baton Rouge, LA 70804

Inter-Tribal Council of Louisiana, INC
Kevin Billiot, Director
8281 Goodwood Blvd. Suite I-2
Baton Rouge, LA 70808

Coushatta Tribe of Louisiana
P.O. Box 818
Elton, LA 70532

Jena Band of Choctaw Indians
P.O. Box 14
Jena, LA 71342

Mississippi Band of Choctaw Indians
101 Industrial Rd
Choctaw, MS 39350

Tunica-Biloxi Tribe of Louisiana
P.O. Box 1589
Marksville, LA 71351

Dept of Interior

U.S. Geological Survey
3535 S. Sherwood Forest Suite 120
Baton Rouge, LA 70806

U.S. National Park Service
Southeast Region
100 Alabama St., SW
1924 Building
Atlanta, GA 30303

LSU

Louisiana State University
Sea Grant Legal Advisory Service
James G Wilkins
227B Sea Grant Building
Baton Rouge, LA 70803

Dept of Natural Resources

Louisiana Department of Natural Resources
Office of Conservation
617 N. 3rd St.
Baton Rouge, LA 70802

Louisiana Department of Natural Resources
Office of Mineral Resources
P.O. Box 2827
Baton Rouge, LA 70821

Natural Resources Service

Natural Resources Conservation Service
Kevin D. Norton
3737 Government St.
Alexandria, LA 71302

Dept of Public Safety

Department of Public Safety
Highway Safety Commission
P.O. Box 66336
Baton Rouge, LA 70896

Wildlife & Fisheries

Department of Wildlife & Fisheries
Louisiana Natural Heritage Program
P.O. Box 98000
Baton Rouge, LA 70898

Intradepartmental

Floodplain Management Program
Susan Veillon → District 64

District 62
Cristine Gowland, Traffic Engineer

District 62
Allison Schilling, District Administrator

LIVINGSTON PARISH MAILING LIST
*****Updated January 17, 2013*****

Honorable Mack "Bodi" White
LA State Senate
(District 6)
808 O'Neal Ln.
Baton Rouge, LA 70816

Honorable Dale Erdey
The State Senate
(District 13)
P.O Box 908
Livingston, LA 70754

Honorable Jody Amedee
The State Senate
(District 18)
2109 S. Burnside Ave, Suite A
Gonzales, LA 70737

Honorable Valarie Hodges
LA House of Representatives
(District 64)
35055 LA Hwy 16, Suite 2A
Denham Springs, LA 70706

Honorable J. Rogers Pope
LA House of Representatives
(District 71)
P.O. Box 555
Denham Springs, LA 70727

Honorable Clay Schexnayder
LA House of Representatives
(District 81)
6473 Hwy 44, Ste. 205
Gonzales, LA 70737

Honorable Sherman Q. Mack
LA House of Representatives
(District 95)
P.O. Box 1450
Livingston, LA 70754

Capitol Region Planning Commission
P.O. Box 3355
Baton Rouge, LA 70821

Livingston Parish Sheriff
P.O. Box 850
Livingston, LA 70754

Capitol Soil & Water Conservation District of LA
2191 Tower Street
Denham Springs, LA 70726

Louisiana State Police
Troop A
17801 Highland Rd.
Baton Rouge, LA 70810

Greater Gonzales Chamber of Commerce
P.O. Box 1204
Gonzales, LA 70737

Ms. Karen Oberlies
Dept. of the Army – Tech Support
P.O. Box 60267
New Orleans, LA 70538

Floodplain Administrator
Livingston Parish Police Jury
P.O. Box 427
Livingston, LA 70754

Livingston Parish Police Jury
P.O. Box 427
Livingston, LA 70754

Livingston Parish Council
P.O. Box 335
Livingston, La 70754

Baton Rouge Bicycle Club
P.O. Box 253
Baton Rouge, LA 70821

Livingston Parish School Board
P.O. Box 1130
Livingston, La 70754

Amite River Basin Commission
3535 S. Sherwood Forest Blvd.
Baton Rouge, LA 70816

Chitimacha Tribe
155 Chitimacha Loop Rd.
Charenton, LA 70523

Alabama Coushatta Tribe of TX
575 State Park Rd. 56
Livingston, TX 77351

Choctaw Nation of Oklahoma
Ian Thompson PhD, RPA
P.O. Box 1210
Durant, OK 74702-1210

SOLICIT VIEWS ON-LINE
LA DEPT OF NATURAL RESOURCES
COASTAL MANAGEMENT DIVISION

DEPARTMENT OF THE ARMY
NEW ORLEANS DISTRICT, CORPS OF ENGINEERS
P. O. BOX 60267
NEW ORLEANS, LOUISIANA 70160-0267

FEB 22 2013

REPLY TO
ATTENTION OF

Operations Division
Operations Manager,
Completed Works

Ms. Noel Ardoin
Louisiana Department of Transportation
and Development
P.O. Box 94245
Baton Rouge, Louisiana 70804-9245

Dear Ms. Ardoin:

This is in response to your Solicitation of Views request dated January 17, 2013, concerning the Juban Road Widening (I-12 to US 190) in Livingston Parish, Louisiana (State Project No. H.004634).

We have reviewed your request for potential Department of the Army regulatory requirements and impacts on any Department of the Army projects.

We do not anticipate any adverse impacts to any Corps of Engineers projects.

Information and signatures obtained from recent maps, aerial photography, and local soil surveys concerning this site are indicative of the occurrence of waters of the United States, including wetlands. Department of the Army (DA) permits are required prior to the deposition or redistribution of dredged or fill material into jurisdictional wetlands or waters of the United States. If an approved delineation is needed, please furnish us with the detailed field data concerning vegetation, soils, and hydrology that we require for all jurisdictional decisions. The fact that a field wetland delineation/determination has not been completed does not alleviate your responsibility to obtain the proper DA permits prior to working in jurisdictional wetlands or waters occurring on this property.

You are advised that this jurisdictional determination is valid for a period of five years from the date of this letter unless new information warrants revision prior to the expiration date or the District Commander has identified, after public notice and comment, that specific geographic areas with rapidly changing environmental conditions merit re-verification on a more frequent basis.

Off-site locations of activities such as borrow, disposals, haul-and detour-roads and work mobilization site developments may be subject to Department of the Army regulatory requirements and may have an impact on a Department of the Army project.

You should apply for said permit well in advance of the work to be performed. The application should include sufficiently detailed maps, drawings, photographs, and descriptive text for accurate evaluation of the proposal.

Please contact Mr. Robert Heffner, of our Regulatory Branch by telephone at (504) 862-1288, or by e-mail at Robert.A.Heffner@usace.army.mil for questions concerning wetlands determinations or need for on-site evaluations. Questions concerning regulatory permit requirements may be addressed to Mr. John Herman by telephone at (504) 862-1581 or by e-mail at John.M.Herman@usace.army.mil.

Future correspondence concerning this matter should reference our account number MVN-2013-00296-SE. This will allow us to more easily locate records of previous correspondence, and thus provide a quicker response.

Sincerely,

Karen L. Clement

Karen L. Clement
Solicitation of Views Manager

RECEIVED
JAN 22 2013
FISH & WLDL. SERV
LAFAYETTE, LA

STATE OF LOUISIANA
DEPARTMENT OF TRANSPORTATION AND DEVELOPMENT
P.O. Box 94245
Baton Rouge, Louisiana 70804-9245
www.dotd.la.gov
225.242.4502

BOBBY JINDAL
GOVERNOR

SHERRI H. LEBAS, P.E.
SECRETARY

January 17, 2013

STATE PROJECT NO. H.004634
FEDERAL AID PROJECT NO. H004634
JUBAN ROAD WIDENING (I-12 TO US 190)
LA 1026
LIVINGSTON PARISH

This project has been reviewed for effects to Federal trust resources under our jurisdiction and currently protected by the Endangered Species Act of 1973 (Act). The project, as proposed,
(✓) Will have no effect on those resources
( ) is not likely to adversely affect those resources.
This finding fulfills the requirements under Section 7(a)(2) of the Act.

Jan 29 2013
Acting Supervisor
Louisiana Field Office
U.S. Fish and Wildlife Service
Date

TO: Solicitation of Views Mailing List

SUBJECT: **SOLICITATION OF VIEWS**

Early in the planning stages of a transportation facility, views from federal, state, and local agencies, organizations, and individuals are solicited. The special expertise of these groups can assist DOTD with the early identification of possible adverse economic, social, or environmental effects or concerns. Your assistance in this regard will be appreciated.

Due to the earliness of this request for your views, very limited data concerning the proposed project exists. We have, however, attached a map showing the general location of the proposed project, along with a preliminary project description.

It is requested that you review the attached information and furnish us with your views and comments by **February 22, 2013**. Replies should be addressed to LA DOTD; Environmental Engineer Administrator; P.O. Box 94245; Baton Rouge, Louisiana 70804-9245. Please reference the State Project Number in your reply.

If you have any questions or require additional information, please contact Cyndi Bowman at 225.242.4510.

SITE MAY CONTAIN WETLANDS
Contact the U.S. Army Corps of Engineers
for a jurisdictional determination.

District: New Orleans, LA

Telephone No. 504-862-2274

Sincerely,

T. Gafuee
for Noel Ardoin
Environmental Engineer Administrator

Attachments
NA/clb
cc: District Administrator
District Traffic Operations Engineer

BOBBY JINDAL
GOVERNOR

State of Louisiana
DEPARTMENT OF WILDLIFE AND FISHERIES
OFFICE OF WILDLIFE

ROBERT J. BARHAM
SECRETARY
JIMMY L. ANTHONY
ASSISTANT SECRETARY

Date	February 1, 2013
Name	Noel Ardoin
Company	LA DOTD
Street Address	P.O. Box 94245
City, State, Zip	Baton Rouge, LA 70804
Project	State Project No. H.004634 Juban Road Widening(I-12 to US 90) LA 1026
Project ID	252013
Invoice Number	13020105

Personnel of the Habitat Section of the Coastal & Nongame Resources Division have reviewed the preliminary data for the captioned project. After careful review of our database, no impacts to rare, threatened, or endangered species or critical habitats are anticipated for the proposed project. No state or federal parks, wildlife refuges, scenic streams, or wildlife management areas are known at the specified site within Louisiana's boundaries.

The Louisiana Natural Heritage Program (LNHP) has compiled data on rare, endangered, or otherwise significant plant and animal species, plant communities, and other natural features throughout the state of Louisiana. Heritage reports summarize the existing information known at the time of the request regarding the location in question. The quantity and quality of data collected by the LNHP are dependent on the research and observations of many individuals. In most cases, this information is not the result of comprehensive or site-specific field surveys; many natural areas in Louisiana have not been surveyed. This report does not address the occurrence of wetlands at the site in question. Heritage reports should not be considered final statements on the biological elements or areas being considered, nor should they be substituted for on-site surveys required for environmental assessments. LNHP requires that this office be acknowledged in all reports as the source of all data provided here. If at any time Heritage tracked species are encountered within the project area, please contact the LNHP Data Manager at 225-765-2643. If you have any questions, or need additional information, please call 225-765-2357.

Sincerely,

Carolyn Michael
for Amity Bass, Coordinator
Natural Heritage Program

BOBBY JINDAL
GOVERNOR

State of Louisiana
DEPARTMENT OF WILDLIFE AND FISHERIES
OFFICE OF WILDLIFE

ROBERT J. BARHAM
SECRETARY
JIMMY L. ANTHONY
ASSISTANT SECRETARY

INVOICE

RETAIN THIS COPY FOR YOUR RECORDS

Date	February 1, 2013
Invoice Number	13020105
Project	State Project No. H.004634 Juban Road Widening(I-12 to US 90) LA 1026
Name	Noel Ardoin
Company	LA DOTD
Street Address	P.O. Box 94245
City, State, Zip	Baton Rouge, LA 70804
Number of Quads Reviewed	1
Total Due	$0.00

Payment should be made to "Louisiana Department of Wildlife & Fisheries" within 30 days of the date of this invoice. Please include the invoice number on your check and return a copy of this invoice with your remittance to the following address:

Louisiana Department of Wildlife & Fisheries
Attn: Jennifer Riddle
P.O. Box 80399
Baton Rouge, LA 70898-0399

Should you have any questions regarding this invoice, for review of the Louisiana Natural Heritage database for information on known sensitive elements at a charge of $30.00 per quad reviewed, please contact LNHP at (225) 765-2357.

BOBBY JINDAL
GOVERNOR

State of Louisiana
DEPARTMENT OF WILDLIFE AND FISHERIES
OFFICE OF WILDLIFE

ROBERT J. BARHAM
SECRETARY
JIMMY L. ANTHONY
ASSISTANT SECRETARY

INVOICE

RETURN THIS COPY OF INVOICE WITH PAYMENT

Date	February 1, 2013
Invoice Number	13020105
Project	State Project No. H.004634 Juban Road Widening(I-12 to US 90) LA 1026
Name	Noel Ardoin
Company	LA DOTD
Street Address	P.O. Box 94245
City, State, Zip	Baton Rouge, LA 70804
Number of Quads Reviewed	1
Total Due	$0.00

Payment should be made to "Louisiana Department of Wildlife & Fisheries" within 30 days of the date of this invoice. Please include the invoice number on your check and return a copy of this invoice with your remittance to the following address:

Louisiana Department of Wildlife & Fisheries
Attn: Jennifer Riddle
P.O. Box 80399
Baton Rouge, LA 70898-0399

Should you have any questions regarding this invoice, for review of the Louisiana Natural Heritage database for information on known sensitive elements at a charge of $30.00 per quad reviewed, please contact LNHP at (225) 765-2357.

JAY DARDENNE
LIEUTENANT GOVERNOR

State of Louisiana

OFFICE OF THE LIEUTENANT GOVERNOR
DEPARTMENT OF CULTURE, RECREATION & TOURISM
OFFICE OF CULTURAL DEVELOPMENT

CHARLES R. DAVIS
DEPUTY SECRETARY

PAM BREAUX
ASSISTANT SECRETARY

January 24, 2013

Noel Ardoin
Environmental Engineer Administrator
LDOTD
P.O. Box 94245
Baton Rouge, LA 708040-9245

Re: Section 106 Review
Requested Additional Information
State Project No. H.004634
Proposed Juban Road Widening (I-12 to US 190)
Livingston Parish, LA

Dear Ms. Ardoin:

Thank you for your letter of January 17, 2013, concerning the above-referenced undertaking. We are unable to complete the Section 106 review at this time due to the submittal of insufficient documentation as required by the Section 106 Regulations (36 CFR 800). We will need the following information to complete our review for the aforementioned project:

- ☐ Name of federal agency, agency involvement (Funding, license\permit, etc. and description of the undertaking (Detailed description of project).
- ☐ Applicant contact information (Name, address, phone number and email address).
- ☐ Agency contact information (Name, address, phone number and email address).
- ☒ Description of the Area of Potential Effects (APE). The APE can be direct or indirect. It is defined as "the geographic area or areas within which an undertaking may cause changes in the character or use of historic properties, if any such properties exist." (Include the latitude\longitude of the undertaking location and APE)
- ☒ Description of all historic properties within and adjacent to the APE. The historic standing structure is any structure fifty years of age and older. Under Section 106, it is the responsibility of the federal agency or its designee to identify all structures listed or eligible for listing in the National Register of Historic Places

ALABAMA-COUSHATTA TRIBE OF TEXAS
571 State Park Road 56 • Livingston, Texas 77351 • (936) 563-1100

February 1, 2013

LA DOTD
Environmental Engineer Administrator
P.O. Box 94245
Baton Rouge, LA 70804-9245

Dear Engineer:

On behalf of the Alabama-Coushatta Tribe, our appreciation is expressed on your efforts to consult us regarding H004634 LA 1026 road widening in Livingston Parish.

Our Tribe maintains ancestral associations throughout the state of Louisiana despite the absence of written records to completely identify Tribal activities, villages, trails, or grave sites. However, it is our objective to ensure significances of American Indian ancestry, especially of Alabama-Coushatta origin, are administered with the utmost considerations.

Upon review of your January 17, 2013 submission, no known impacts to cultural assets of the Alabama-Coushatta Tribe of Texas are anticipated in conjunction with this proposal. In the event of inadvertent discovery of human remains and/or archaeological artifacts, activity in proximity to the location must cease and appropriate authorities, including this office, notified without delay for additional consultations.

Should you require further assistance regarding this matter, please do not hesitate to contact us.

Respectfully submitted,

Bryant J. Celestine
Historic Preservation Officer

Telephone: 936 – 563 – 1181 celestine.bryant@actribe.org Fax: 936 – 563 – 1183

Choctaw Nation of Oklahoma

P.O. Box 1210 • Durant, OK 74702-1210 • (580) 924-8280

Gregory E. Pyle
Chief

Gary Batton
Assistant Chief

April 29, 2013

Noel Ardoin
Environmental Engineer Administrator
Louisiana Dept of Transportation
P.O. Box 94245
Baton Rouge, LA 70804-9245

RE: LA DOT, State Project No. H.0004634, Juban Road Widening I 12 to US 190,Notice of Open House Public Meeting, Livingston Parish, LA

Dear Mr. Ardoin,

Thank you for your correspondence regarding the open house public meeting notice. Unfortunately we will not be able to attend the meeting. Normally, we do not attend public meetings due to the confidentiality issues associated with discussing archaeological and cultural sites. As per our earlier letter please send our office copies of archaeological surveys and the SHPO comments concerning this project, as well as your official finding of effects on historic properties. Please feel free to contact me with any questions or concerns.

Sincerely,

Dr. Ian Thompson
Director, Historic Preservation Department
Tribal Archaeologist, NAGPRA Specialist, THPO
Choctaw Nation of Oklahoma
PO Drawer 1210
Durant, OK 74701

By: _____
Johnnie Jacobs
Section 106 Coordinator
jjacobs@choctawnation.com

Choctaw Nation of Oklahoma

P.O. Box 1210 • Durant, OK 74702-1210 • (580) 924-8280

Gregory E. Pyle
Chief

Gary Batton
Assistant Chief

February 19, 2012

Noel Ardoin
Environmental Engineer Administrator
Louisiana Dept of Transportation
P.O. Box 94245
Baton Rouge, LA 70804-9245

RE: LA DOT, State Project No. H.0004634, Juban Road Widening I 12 to US 190,, Livingston Parish, LA

Dear Mr. Ardoin,

Thank you for your correspondence regarding the above referenced project. Livingston Parish is located within the historic area of interest for the Choctaw Nation of Oklahoma. Before we can comment on the likelihood of this project affecting Choctaw historic or sacred sites, we request a copy of archaeological survey and the SHPO comments concerning this project, as well as your official finding of effects on historic properties. Please feel free to contact me with any questions or concerns.

Sincerely,

Dr. Ian Thompson
Director, Historic Preservation Department
Tribal Archaeologist, NAGPRA Specialist, THPO
Choctaw Nation of Oklahoma
PO Drawer 1210
Durant, OK 74701

By: _____
Johnnie Jacobs
Section 106 Coordinator
jjacobs@choctawnation.com

Section 80

Jena Band of Choctaw Indians

P. O. Box 14 • Jena, Louisiana 71342-0014 • Phone: 318-992-2717 • Fax: 318-992-8244

State of Louisiana
Department of Transportation and Development
P.O. Box 94245
Baton Rouge, LA 70804-9245

April 5, 2013

SUBJECT: State Project No. H.004634
Federal Aid Project No. H00434
Juban Road Widening (I-12 to US 190)
La 1026
Parish: Livingston

COMMENTS: Please provide our office with a cultural resource report for this project and any further associated significant importance to the Jena Band of Choctaw Indians Cultural Department.

Sincerely,

Dana Masters
THPO

P.O. Box 14
Jena, LA 71342

Phone: 318-992-1205
Fax: 318-992-8244

JAY DARDENNE
LIEUTENANT GOVERNOR

State of Louisiana

OFFICE OF THE LIEUTENANT GOVERNOR
DEPARTMENT OF CULTURE, RECREATION & TOURISM
OFFICE OF STATE PARKS

CHARLES R. DAVIS
DEPUTY SECRETARY

STUART JOHNSON, PH.D.
ASSISTANT SECRETARY

May 9, 2014

LA DOTD
P.O. Box 94245
Baton Rouge, La 70804

Re: State Project No. H.004634

Dear Cyndi Bowman:

The Office of State Parks has reviewed your proposed project to widen Juban Road (LA 1026) from I-12 to US 190 in Livingston Parish.

We have no parks, sites or other recreational areas located near this project and have no objections or concerns.

Best regards,

Britt Evans
Natural Resources Manager

BE: be

P.O. BOX 44426 • BATON ROUGE, LOUISIANA 70804-4426 • PHONE (225) 342-8111 • FAX (225) 342-8107 • WWW.CRT.STATE.LA.US
AN EQUAL OPPORTUNITY EMPLOYER

FEMA

Mitigation Division
800 N. Loop 288
Denton, TX 76209-3698

Date: 1-24-13 **Number of Pages** (including cover): 3

To: Cyndi Bowman **Fax:** 225-242-4500

Office: _____ **Phone:** _____

From: T Hansen **Fax:** **940-898-5195**

Office: **R6 FIM Division** **Phone:** _____

Comments:

U.S. Department of Homeland Security
FEMA Region 6
800 N. Loop 288
Denton, TX 76209-3698

FEMA

Region VI
Federal Insurance and Mitigation Administration

Public Notice Review

Re: Juban Road Widening (I-12 to US 190
State Project # H.004634
Livingston Parish (CID# 220113)

We offer the following comments:

Please contact Chuck Vincent, the Livingston Parish Floodplain Administrator (phone number 225-686-3021) for Floodplain Development Permit requirements.

Reviewer Tamara Hansen, CFM Date: 1/23/2013

If further information is required, please write to the address above or call (940) 383-7322.

STATE OF LOUISIANA
DEPARTMENT OF TRANSPORTATION AND DEVELOPMENT
P.O. Box 94245
Baton Rouge, Louisiana 70804-9245
www.dotd.la.gov
225.242.4502

BOBBY JINDAL
GOVERNOR

SHERRI H. LEBAS, P.E.
SECRETARY

January 17, 2013

STATE PROJECT NO. H.004634
FEDERAL AID PROJECT NO. H004634
JUBAN ROAD WIDENING (I-12 TO US 190)
LA 1026
LIVINGSTON PARISH

TO: Solicitation of Views Mailing List

SUBJECT: **SOLICITATION OF VIEWS**

Early in the planning stages of a transportation facility, views from federal, state, and local agencies, organizations, and individuals are solicited. The special expertise of these groups can assist DOTD with the early identification of possible adverse economic, social, or environmental effects or concerns. Your assistance in this regard will be appreciated.

Due to the earliness of this request for your views, very limited data concerning the proposed project exists. We have, however, attached a map showing the general location of the proposed project, along with a preliminary project description.

It is requested that you review the attached information and furnish us with your views and comments by **February 22, 2013**. Replies should be addressed to LA DOTD; Environmental Engineer Administrator; P.O. Box 94245; Baton Rouge, Louisiana 70804-9245. Please reference the State Project Number in your reply.

If you have any questions or require additional information, please contact Cyndi Bowman at 225.242.4510.

Sincerely,

T. Gifree

for Noel Ardoin
Environmental Engineer Administrator

Attachments
NA/clb
cc: District Administrator
District Traffic Operations Engineer

AN EQUAL OPPORTUNITY EMPLOYER
A DRUG-FREE WORKPLACE
02 53 2010

U. S. Department of Homeland Security
FEMA Region 6
800 North Loop 288
Denton, TX 76209-3698

FEMA

FEDERAL EMERGENCY MANAGEMENT AGENCY
REGION VI
MITIGATION DIVISION

NOTICE REVIEW/ENVIRONMENTAL CONSULTATION

☐ We have no comments to offer. ☒ We offer the following comments:

WE WOULD REQUEST THAT THE PARISH FLOODPLAIN ADMINISTRATOR BE CONTACTED FOR THE REVIEW AND POSSIBLE PERMIT REQUIREMENTS FOR THIS PROJECT. IF FEDERALLY FUNDED, WE WOULD REQUEST PROJECT TO BE IN COMPLIANCE WITH EO11988 & EO 11990.

Chuck Vincent
Building Official
Livingston Parish
P.O. Box 427
Livingston, LA 70754
cvincent@livingstonparishla.gov
225-686-3021

REVIEWER:

Mayra G. Diaz
Floodplain Management and Insurance Branch
Mitigation Division

DATE: April 23, 2013

If additional jurisdictions are involved in the project or if you have any questions, please contact me at 940-898-5541

STATE OF LOUISIANA
DEPARTMENT OF TRANSPORTATION AND DEVELOPMENT
P.O. Box 94245
Baton Rouge, Louisiana 70804-9245
www.dotd.la.gov
225.242.4502

BOBBY JINDAL
GOVERNOR

SHERRI H. LEBAS P.E.
SECRETARY

April 11, 2013

STATE PROJECT NO. H.004634
FEDERAL AID PROJECT NO. H004634
JUBAN ROAD WIDENING – I12 TO US 190
LA 1026
LIVINGSTON PARISH

TO: SOLICITATION OF VIEWS MAILING LIST

SUBJECT: Notice of Open House Public Meeting

The Louisiana Department of Transportation and Development will conduct an Open House Public Meeting for the captioned project from 4:00 to 7:00 p.m., on Tuesday, April 30. The meeting will be held at the Eastside Elementary School at 9735 Lockhart Road in Denham Springs, LA. A notice with this information will be published in The Livingston Parish News to inform the public.

The purpose of the meeting is to inform the public of the proposed project and to provide an opportunity for them to express their comments, views, and concerns. For your reference and information, attached is a copy of the public notice.

If you have any questions or require additional information, please contact Cyndi Bowman at 225.242.2510.

Sincerely,

for Noel Ardoin
Environmental Engineer Administrator

NA/clb
Attachment

STATE OF LOUISIANA
DEPARTMENT OF TRANSPORTATION AND DEVELOPMENT
P.O. Box 94245
Baton Rouge, Louisiana 70804-9245
www.dotd.la.gov
225-379-3005

BOBBY JINDAL
GOVERNOR

SHERRI H. LEBAS, P.E.
SECRETARY

February 15, 2013

STATE PROJECT NO.: H.004634
F.A.P. NO.: H.004634
PROJECT DESCRIPTION: JUBAN ROAD WIDENING (I-12 TO US 90)
ROUTE: LA 1026
PARISH: LIVINGSTON

Ms. Noel Ardoin
Environmental Engineer Administrator
LADOTD
P.O. Box 94245
Baton Rouge, LA 70804-9245

Subject: Solicitation of Views

Dear Ms. Ardoin:

Enclosed is a copy of the Flood Insurance Rate Map (FIRM) for Livingston Parish indicating the proposed project.

During and after the project consideration must be given for the occurrence of a base flood inundation. At this time, consideration should also be given to the responsibility for clearing debris and keeping the area cleared so as not to interfere with its function.

In order to assure compliance with the National Flood Insurance Program (NFIP), and ensure that appropriate permits are obtained, please contact the floodplain administrator for Livingston Parish. The contact person is: Mr. Chuck Vincent, P.O. Box 998, Livingston, LA 70754 and telephone no. (225)686-3021.

We thank you for the opportunity to comment on this project. If you need additional information, please contact our office, (225) 379-3005.

Sincerely,

Susan Veillon

Susan Veillon, CFM
Floodplain Management Program Coordinator

pc: Mr. Chuck Vincent

AN EQUAL OPPORTUNITY EMPLOYER
A DRUG-FREE WORKPLACE
02 53 2010

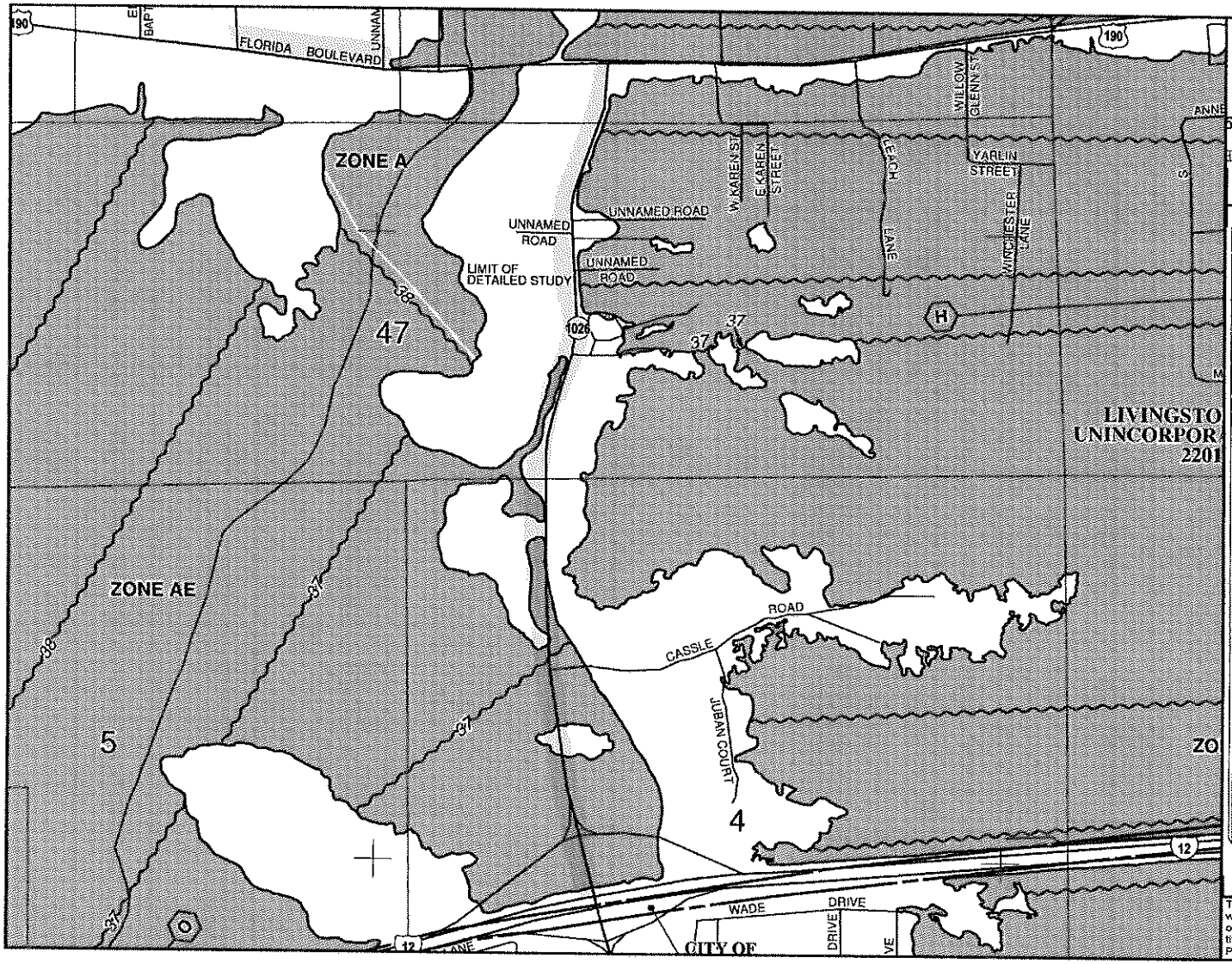

MAP SCALE 1" = 1000'

500 0 1000 2000 FEET

METE

PANEL 0210E

NATIONAL FLOOD INSURANCE PROGRAM

FIRM

FLOOD INSURANCE RATE MAP

LIVINGSTON PARISH, LOUISIANA

AND INCORPORATED AREAS

PANEL 210 OF 525

(SEE MAP INDEX FOR FIRM PANEL LAYOUT)

CONTAINS:

COMMUNITY	NUMBER	PANEL	SUFFIX
LIVINGSTON PARISH	220113	0210	E
DENHAM SPRINGS, CITY OF	220116	0210	E
WALKER, TOWN OF	220121	0210	E

Notice to User: The **Map Number** shown below should be used when placing map orders; the **Community Number** shown above should be used on insurance applications for the subject community.

MAP NUMBER
22063C0210E

MAP REVISED
APRIL 3, 2012

Federal Emergency Management Agency

This is an official copy of a portion of the above referenced flood map. It was extracted using F-MIT On-Line. This map does not reflect changes or amendments which may have been made subsequent to the date on the title block. For the latest product information about National Flood Insurance Program flood maps check the FEMA Flood Map Store at www.msc.fema.gov

LIVINGSTON PARISH
OFFICE OF PERMITS

LAYTON RICKS
PARISH PRESIDENT

MIKE HUGHES
CHIEF OF STAFF

CHUCK VINCENT
DIRECTOR OF PERMITS

February 11, 2013

LA DOTD; Environmental Engineer Administrator
P.O. Box 94245
Baton Rouge, LA 70804-9245

RE: STATE PROJECT NO: H.004634
Federal Aid Project No. H004634
Juban Road Widening (I-12 to US 190)
LIVINGSTON PARISH
LA 1026

SUBJECT: SOLICITATION OF VIEWS

To Whom It May Concern:

This letter addresses your request for any floodplain comments or concerns the Parish might have with the construction of the above referenced state project.

Being the Floodplain Manager for Livingston Parish, I do not foresee any effect the construction will have on the floodplain areas, as long as the rivers, creeks and drainage ditches do not get blocked or choked down due to erosion silting or construction debris.

If further documentation is needed, please contact me at (225) 686-3021.

Sincerely,

02-11-2013

Chuck Vincent, C.B.O.
Floodplain Manager

CV/dd

P.O. BOX 998, LIVINGSTON, LA 70754
P: (225) 686-3021 F: (225) 686-9989
WWW.LIVINGSTONPARISHLA.GOV

THE PARISH OF Livingston

THIS INSTITUTION IS AN EQUAL OPPORTUNITY PROVIDER, AND EMPLOYER.

Cynthia Bowman

From: Noel Ardoin
Sent: Monday, February 04, 2013 8:53 AM
To: Cynthia Bowman
Subject: FW: DEQ SOV 130123/0185 Juban Road Widening (I-12 to U5 190)

From: Beth Altazan-Dixon
Sent: Friday, February 01, 2013 11:14 AM
To: Noel Ardoin
Subject: DEQ SOV 130123/0185 Juban Road Widening (I-12 to US 190)

February 1, 2013

Noel A. Ardoin
Environmental Engineer Administrator
Louisiana Department of Transportation and Development
P. O. Box 94245
Baton Rouge, LA 70804-9245

RE: State Project No. H.004634 - DEQ SOV 130123/0185
LA 1026 Juban Road Widening (I-12 to US 190)
Livingston Parish, Louisiana

Dear Ms. Ardoin:

The Assessment Division of the Office of Environmental Compliance has reviewed the information provided in your letter of January 17, 2013, regarding the referenced project in Livingston Parish. Effective July 20, 2012, Livingston Parish was designated by EPA as an ozone nonattainment parish under the 8-hour standard (77 FR 30088, May 21, 2012). Federal actions proposed for construction in a nonattainment area are subject to the State's transportation conformity regulations as promulgated under *LAC 33:III.Chapter 14, Subchapter B.*

If this project is deemed regionally significant it must be included in a conforming metropolitan transportation plan, i.e., included in a comprehensive regional emissions analysis which demonstrates conformity to the State Implementation Plan for control of ozone.

Should you have any questions regarding state rules and regulations pertaining to transportation conformity, please contact me at (225) 219-3719. Thank you for affording us the opportunity to comment on this transportation project.

Sincerely,

Yasoob Zia
Environmental Scientist Manager
Assessment Division

lhw
130123/0185

Beth

Beth Altazan-Dixon, EPS III
Performance Management
LDEQ/Office of the Secretary
Business and Community Outreach and Incentives Division
P.O. Box 4301 (602 N. 5th Street)
Baton Rouge, LA 70821-4301
Phone: 225-219-3955
Fax: 225-325-8148
Email: ***beth.dixon@la.gov***

BOBBY JINDAL
GOVERNOR

STEPHEN CHUSTZ
INTERIM SECRETARY

State of Louisiana

DEPARTMENT OF NATURAL RESOURCES
OFFICE OF COASTAL MANAGEMENT

02/11/2013

LA DOTD
1201 CAPITAL ACCESS ROAD
BATON ROUGE, LA 70802
Attn: Cyndi Bowman

RE: P20130191, Solicitation of Views
LA DOTD
Description: Proposal to widen Juban Road (LA 1026) from I-12 to US 190. (State Project # H.004634)
Location: Juban Road (LA 1026) from I-12 to US 190, Walker, LA. POB - Lat 30° 28' 07.5"N / Long -90° 55' 07.4"W to POE - Lat 30° 29' 2.1"N / Long -90° 55' 03.0"W; Section 4, T07S-R03E; Section 47 and 33, T06S-R03E.
Livingston Parish, LA

Dear Cyndi Bowman:

We have received your Solicitation of Views for the above referenced project, which has been found to be outside the Louisiana Coastal Zone. Therefore, pursuant to the provisions of LA R.S. 49:214.25.E, a Coastal Use Permit will not be required.

This determination is valid for two (2) years from the date of this letter. If the proposed activity is not initiated within this 2-year period, this determination will expire and the applicant will be required to submit a new application. Please note that your solicitation packet has not been forwarded to the USACE, or any other agency outside of OCM and the Parish local coastal program. If you would like a determination from other regulatory and/or resource agency(ies) regarding this project, please submit your request directly to that/those agency(ies) from which you would like a determination.

This determination has been made on the basis of information provided by your application. If it is later established that you furnished erroneous data, you may be directed to alter or modify your plans, to remove structures you have installed, and/or to restore the work area to pre-project conditions at your own expense. If it is established that you knowingly furnished erroneous data, you could also be subject to legal action.

Post Office Box 44487 • Baton Rouge, Louisiana 70804-4487
617 North Third Street • 10th Floor • Suite 1078 • Baton Rouge, Louisiana 70802
(225) 342-7591 • Fax (225) 342-9439 • http://www.dnr.louisiana.gov
An Equal Opportunity Employer

The drawings submitted with your referenced application are attached hereto and made a part of the record. If you have any questions regarding this authorization, please contact our office at (225) 342-7591 or (800) 267-4019.

Sincerely,

Karl L. Morgan
Administrator

Karl L. Morgan/eb

Attachments

Final Plats:

1) P20130191 Final Plats 02/06/2013

cc: Jessica Diez, OCM w/plats
Craig Leblanc, CMD/FI w/plats

LA DOTD w/plats

BOBBY JINDAL
GOVERNOR

State of Louisiana
DEPARTMENT OF NATURAL RESOURCES
OFFICE OF CONSERVATION

STEPHEN CHUSTZ
INTERIM SECRETARY

JAMES H. WELSH
COMMISSIONER OF CONSERVATION

February 20, 2013

TO: Ms. Noel Ardoin
Environmental Engineer Administrator
LADOTD
P. O. Box 94245
Baton Rouge, Louisiana 70804-9245

RE: Solicitation of Views
State Project No. H.004634
Federal Aid Project No. H004634
Juban Road Widening (I-12 To US 190)
LA 1026
Livingston Parish

Dear Ms. Ardoin:

In response to your letter dated January 17, 2013, concerning the referenced matter, please be advised that the Office of Conservation collects and maintains many types of information regarding oil and gas exploration, production, distribution, and other data relative to the petroleum industry as well as related and non-related injection well information, surface mining and ground water information and other natural resource related data. Most information concerning oil, gas and injection wells for any given area of the state, including the subject area of your letter can be obtained through records search via the SONRIS data access application available at:

http://www.dnr.louisiana.gov

A review of our computer records for the referenced project area indicates no oil, gas or injection wells located in the project area. The DNR water well database indicates the possibility that there are registered water wells in the vicinity of the project area. Furthermore, unregistered water wells may be located in the area.

The Office of Conservation maintains records of all activities within its jurisdiction in paper, microfilm or electronic format. These records may be accessed during normal business hours, Monday through Friday, except on State holidays or emergencies that require the Office to be closed. Please call 225-342-5540 for specific contact information or for directions to the Office of Conservation, located in the LaSalle Building, 617 North Third Street, Baton Rouge, Louisiana. For pipelines and other underground hazards, please contact Louisiana One Call at 1-800-272-3020 prior to commencing operations. Should you need to direct your inquiry to any of our Divisions, you may use the following contact information:

Division	Contact	Phone No.	E-mail Address
Engineering	Jeff Wells	225-342-5638	jeff.wells@la.gov
Pipeline	Steven Giambrone	225-342-2989	steven.giambrone@la.gov
Injection & Mining	Laurence Bland	225-342-5515	laurence.bland@la.gov
Geological	Mike Kline	225-342-3335	mike.kline@la.gov
Environmental	Gary Snellgrove	225-342-7222	gary.snellgrove@la.gov

If you have difficulty in accessing the data via the referenced website because of computer related issues, you may obtain assistance from our technical support section by selecting Help on the SONRIS tool bar and submitting an email describing your problems and including a telephone number where you may be reached.

Sincerely,

James H. Welsh
AR Commissioner of Conservation

JHW:MBK

United States Department of Agriculture

NRCS

Natural Resources Conservation Service
3737 Government Street
Alexandria, LA 71302

(318) 473-7751
Fax: (318) 473-7626

January 22, 2013

Noel Ardoin
DOTD
P.O. Box 94245
Baton Rouge, La 70804-9245

RE: Juban Road Widening – State Project No.: H.004634

Dear Noel:

I have reviewed the above referenced project for potential requirements of the Farmland Protection Policy Act (FPPA) and potential impact to Natural Resource Conservation Service projects in the immediate vicinity.

Projects are subject to FPPA requirements if they may irreversibly convert farmland (directly or indirectly) to nonagricultural use and are completed by a federal agency or with assistance from a federal agency. For the purpose of FPPA, farmland includes prime farmland, unique farmland, and land of statewide or local importance. Farmland subject to FPPA requirements can be forest land, pastureland, cropland, or other land, but not water or urban built-up land.

The project map submitted with your request indicates that the proposed construction areas will not impact prime farmland and therefore is exempt from the rules and regulations of the Farmland Protection Policy Act (FPPA)—Subtitle I of Title XV, Section 1539-1549. Furthermore, we do not predict impacts to NRCS work in the vicinity.

For specific information about the soils found in the project area, please visit our Web Soil Survey at the following location:

http://websoilsurvey.nrcs.usda.gov/

Please direct all future correspondence to me at the address shown above.

Respectfully,

Sarah Haymaker

Kevin D. Norton ACTING FOR
State Conservationist

UNITED STATES ENVIRONMENTAL PROTECTION AGENCY
REGION 6
1445 ROSS AVENUE, SUITE 1200
DALLAS, TX 75202-2733

February 1, 2013

Ms. Noel A. Ardoin
Environmental Engineer Administrator
LA DOTD
P.O. Box 94245
Baton Rouge, LA 70804-9245

Dear Ms. Ardoin:

We have received your January 17, 2013, letter requesting our evaluation of the potential environmental impacts which might result from the following project:

Road Widening
Juban Road, I-12 to US 190
STP No. H.004634
FAP No. H004634
Livingston Parish, Louisiana

The project, proposed for financial assistance through the Louisiana Department of Transportation and Development is located on the Southern Hills aquifer system which has been designated a sole source aquifer by the EPA. Based on the information provided for the project, we have determined that the project, as proposed, should not have an adverse effect on the quality of the ground water underlying the project site.

This approval of the proposed project does not relieve the applicant from adhering to other State and Federal requirements, which may apply. This approval is based solely upon the potential impact to the quality of ground water as it relates to the EPA's authority pursuant to Section 1424(e) of the Safe Drinking Water Act.

If you did not include the Parish; a legal description; project location and the latitude and longitude if available, please do so in future Sole Source Aquifer correspondence.

If you have any questions on this letter or the sole source aquifer program please contact me at (214) 665-7133.

Sincerely yours,

Michael Bechdol, Coordinator
Sole Source Aquifer Program
Ground Water/UIC Section

cc: Jesse Means, LDEQ

Recycled/Recyclable • *Printed with Vegetable Oil Based Inks on 100% Recycled Paper (40% Postconsumer)*

The Louisiana House of Representatives

The following document is from:

REPRESENTATIVE VALARIE HODGES
District 64

242-4500

To: Cyndi Bowman From: Karen Carouna

Date: 2/20/13 Time: 4:40

Sent by: Karen

Number of pages, including cover: 3

IF THERE IS A PROBLEM WITH THIS TRANSMISSION, PLEASE CONTACT

Karen AT (225) 791-2199. ***Thank you!***

Remarks:

LOUISIANA HOUSE OF REPRESENTATIVES

35055 LA Hwy. 16, Suite 2A
Denham Springs, LA 70706
Email: hodgesv@legis.la.gov
Phone: 225-791-2199
1-800-408-9764
Fax: 225-791-9203

Administration of Criminal Justice
Transportation, Highways, and Public Works
Labor and Industrial Relations

VALARIE HODGES
State Representative ~ District 64

February 19, 2013

Noel Ardoin
Environmental Engineer Administrator
State of La. DOTD
P.O. Box 94245
Baton Rouge, La. 70804-9245

Re: State Project H.004634, Juban Rd. Widening (I-12 to US 190)
LA 1026, Livingston Parish

Dear Noel,

Thank you so much for your inquiry regarding my views on the widening of Juban Road in Livingston Parish. I have already been contacted by several people who are involved with CHILP (Citizens for Highways and Infrastructure in Livingston Parish).

Due to their concerns, I have asked for their input about Project No. H.004634. Please see the attached comments from CHILP.

If you need additional information or if I can be of further assistance, please feel free to contact me.

Sincerely,

Valarie Hodges

Valarie Hodges
State Representative

VH/kc

Citizens for Highways and Infrastructure In Livingston Parish

2/11/2013

JUBAN ROAD WIDENING COMMENTS TO DOTD

1. The original plans for Juban Road(2002) are the ones endorsed by the community. The only change asked for are raised 6" islands with sloped sides at 300' to 500' increments to stop individuals from using the turning lane for driving. (Franklinton design)
2. The new proposed plan calls for a 5' raised median. It will stop commercial development and stop local residents from being able to turn in and out of their driveways and businesses. We have people with heavy equipment going to jobs, people with RV's going to I-12, day care centers with no way for parents to get into the care facility, a Mobil home park which would not be able to get tenants or homes in or out of the park and these are only some of the problems that the proposed plan causes.
3. We do not need two 10' wide pedestrian lanes. This will eventually become a commercial corridor not a green space. This causes too much land to be needed where one 5' sidewalk could serve the same purpose as 20' of wasted right of way.
4. We, as residents of Juban Road, <u>do not want</u> roundabouts on this street. Juban road will carry 20,000+ vehicles a day as stated in ABMB Engineering's feasibility study. The present study does not take into consideration the Juban Extension which is Livingston Parish's number one road project and is on the MPO list. It will carry vehicles in a loop from Central to the North to Hwy 16 in South Livingston Parish. It will connect the Parish's premiere park (North Park) which host Little League baseball tournaments, soccer games and water park and Juban Crossing Development as well as I-12.
5. Juban Road, when complete will carry the majority of traffic from the Northwest part of the Parish to I-12 and will be a non-stop corridor to move people. Roundabouts are the worse solution for moving 18 wheelers, trucks with trailers and rush hour traffic which is what this road will carry when complete to Lockhart Road. In our experience in Florida and in Arizona, roundabouts work in vacation and rural settings not in high volume areas with large vehicles. In both places the speed limit is posted at 45MPH and the average speed maintained was 15MPH. DOTD wants roundabouts because they can put them in and do not have to maintain them after construction but the residents have to live with them forever. This is not a solution but another problem. If anyone has a doubt about this statement, go the L'auberge casino in Baton Rouge. It has three roundabouts in a row. Drive through them as quickly as you can then imagine fire trucks, ambulances, police cars, 18 wheelers, construction equipment, trucks with trailers, delivery trucks and rush hour traffic all together trying to get to or from I-12. This is the typical traffic on Juban Road.
6. DOTD needs to be more far sighted in viewing the needs of the community and more sensitive to the local people in their solutions. The best course of action is for citizens and their elected leaders to get involved with DOTD and have all projects done so that the end result suits the "community" for the long term.

February 19, 2013

To: Ms. Noel Ardoin – Environmental Engineer Administrator

From: Gerald Burns
28630 Juban Road
Denham Springs, La. 70726
melgel12@cox.net
225-937-3112

Subject: State Project No. 004634
Solicitation of Views

I am a land owner and I also own a mobile home park along the east side of Juban Road about half way between I-12 and Hwy 190.

I am very apprehensive about how your proposal to install three (3) four (4) lane roundabouts along the Juban Road corridor will impact me and my business. The mobile home park has been in business since 1978.

To move eighty (80) foot mobile homes in and out of the park requires the entire width of Juban Road plus both shoulders.

Putting a five (5) foot raised barrier in the center of the road bed will impact my business adversely and could possibly shut my business down.

I have traveled in all of the lower forty-eight (48) states and have traveled thru many two (2) lane roundabouts. They have all been installed in rural areas. They seem to work well in that rural environment, because they have good traffic outflow.

The three (3) four lane roundabouts that you have proposed for the Juban Road Corridor won't work in my opinion because the Juban Road and Hwy 190 intersection is very congested. Westbound traffic is backed up and stopped under that traffic signal almost every morning. When there is a wreck on I-12 or Hwy 190 the problem is compounded. Putting a roundabout at that location would only cause further traffic gridlock because there would not be any traffic outflow out of that roundabout.

I recommend a full five (5) lane intersection at that location.

Since the Juban I-12 Interchange was installed several years ago, the Juban Road Corridor has become a major route for First Responders and major trucking traffic in the western side of the parish.

Acadian Ambulance Services is located at the Juban Road and Florida Blvd. intersection. Fire Protection District No. 5 is located at Eden Church and Florida Blvd. intersection.

Future parish highway projects in the area are to extend Juban Road to Lockhart Road and to widen LA 1026 from Burgess Road to LA Hwy 16.

These proposed roads would create a high speed outer loop around the city of Denham Springs.

The speed allowed on the Juban Road Corridor is now at 45 mph. When the widening of the Juban Road Corridor is completed the speed allowed should be 45 mph or greater.

I don't understand the logic of slowing down traffic by installing these roundabouts on the corridor to 10 mph or less especially when it is the primary route for the first responders.

In my opinion the goal of widening any highway should be to increase the speed of the traffic and to increase the capacity of traffic on the roadways.

Adding those roundabouts on this corridor would do the opposite.

The landowners along the Juban Road Corridor do not want these roundabouts.

We want the original design of the project with four (4) lanes of traffic plus the center turning lane. To prevent vehicles from running and passing in the center lane, we propose that raised barriers be installed in the center turning lane that was designed and built in Franklinton, Louisiana by LA DOTD, District 62 (see pictures attached).

Gerald Burns

Gerald Burns

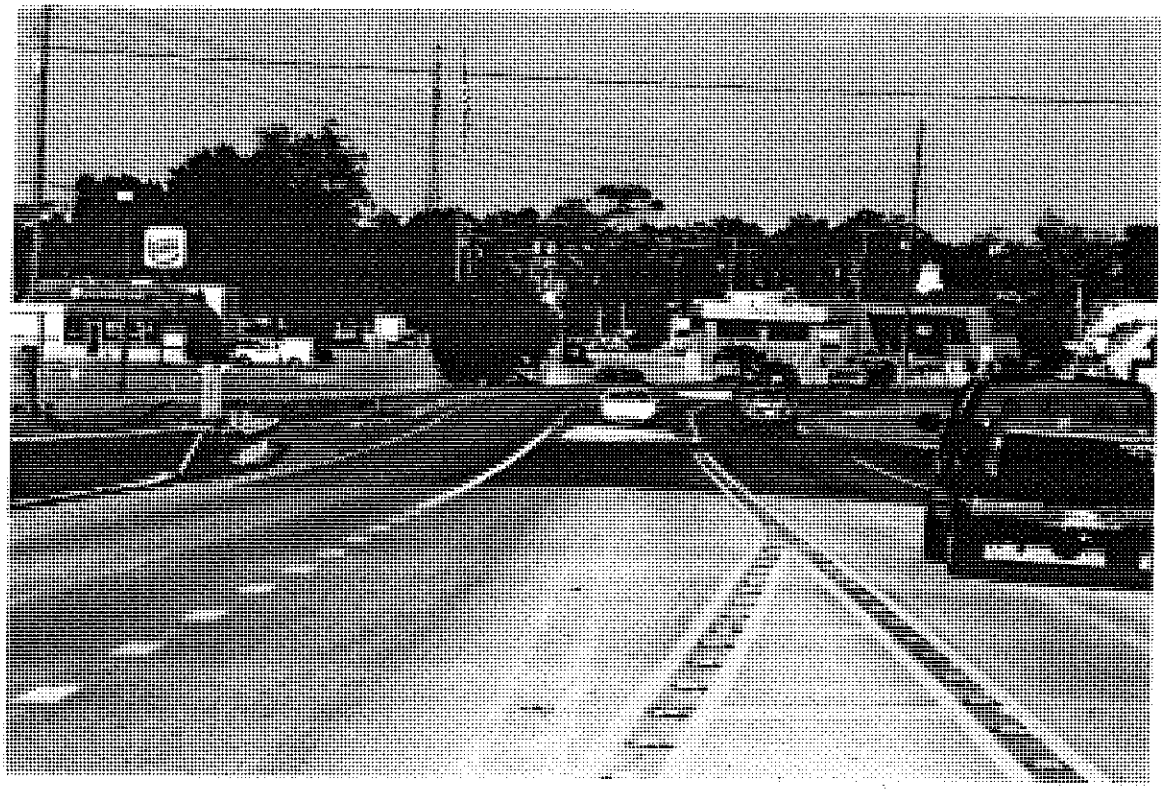

Appendix **G**

Section 106 Correspondence

LOUISIANA DEPARTMENT OF TRANSPORTATION & DEVELOPMENT

Environmental Section
PO Box 94245 | Baton Rouge, LA 70804-9245
Phone: 225-242-4502

Bobby Jindal, Governor
Sherri H. LeBas, P.E., Secretary

December 29, 2014

STATE PROJECT NO. H.004634
FEDERAL PROJECT NO. H004634
PROJECT NAME: JUBAN ROAD WIDENING:I-12 TO U.S.190
ROUTE: LA 1026
PARISH: LIVINGSTON

Ms. Pam Breaux
State Historic Preservation Officer
Department of Culture, Recreation and Tourism
Office of Cultural Development
P.O. Box 44247, Capitol Station
Baton Rouge, LA 70804

SUBJECT: Draft Report-*Phase I Cultural Resources Survey for Juban Road (LA 1026) Widening, Livingston Parish, Louisiana.*

Dear Ms. Breaux:

Enclosed for your review and comment are two hardcopies of the above-titled draft Cultural Resource Survey report, prepared by The Louisiana Department of Transportation and Development (LADOTD) Environmental Section Cultural Resources Staff.

LADOTD in conjunction with the Federal Highway Administration (FHWA), propose widen 1026 Juban Road (LA 1026) between I-12 and US 190, widen a portion of US 190 on either side of its intersection with Juban Road and construct two 4-legged, single-lane, roundabouts on Juban Road between I-12 and US 190 and one three legged roundabout at the intersection of Juban Road and US 190 in Livingston Parish, LA.

LADOTD Cultural Resources staff conducted a Phase I cultural resources survey (CRS) to identify any National Register of Historic Places (NRHP) eligible properties within or in the vicinity of the proposed project and evaluate the effect the proposed project would have on those properties. Overall project length would be approximately 1.82 miles. The total acreage of the project area is approximately 31 acres (12.545 ha), while the Area of Potential Effects (APE) is the limit of the required right-of-way, approximately 17.71 acres (7.17 ha). The total APE is 17.71 acres (7.17 ha) of required ROW.

Field work consisted of pedestrian survey and systematic shovel testing. A total of 67 shovel test probes (STP) were excavated. No intact archaeological deposits were identified. There were no standing structures eligible for the NRHP within the APE. No historic properties were identified within the APE. No further cultural resources work is recommended for this project.

LADOTD, in conjunction with the FHWA, believe that the proposed project would not affect any historic properties. We request your comments on the draft report and concurrence with our finding. Please contact Carey Coxe (carey.coxe@la.gov, 225-242-4520) if you have any questions regarding this request.

Sincerely,

for Noel Ardoin
Environmental Engineer Administrator

Attachment
NA/clc
cc: SHPO File
FHWA